COMP9123: Data Structures & Algorithms

Lecture 02 – Lists

version 1.0

Dr. Armin Chitizadeh

School of Computer Science

THE UNIVERSITY OF SYDNEY

Inspired by Dr Karlos Isach's lectures on Data Structures and Algorithms.

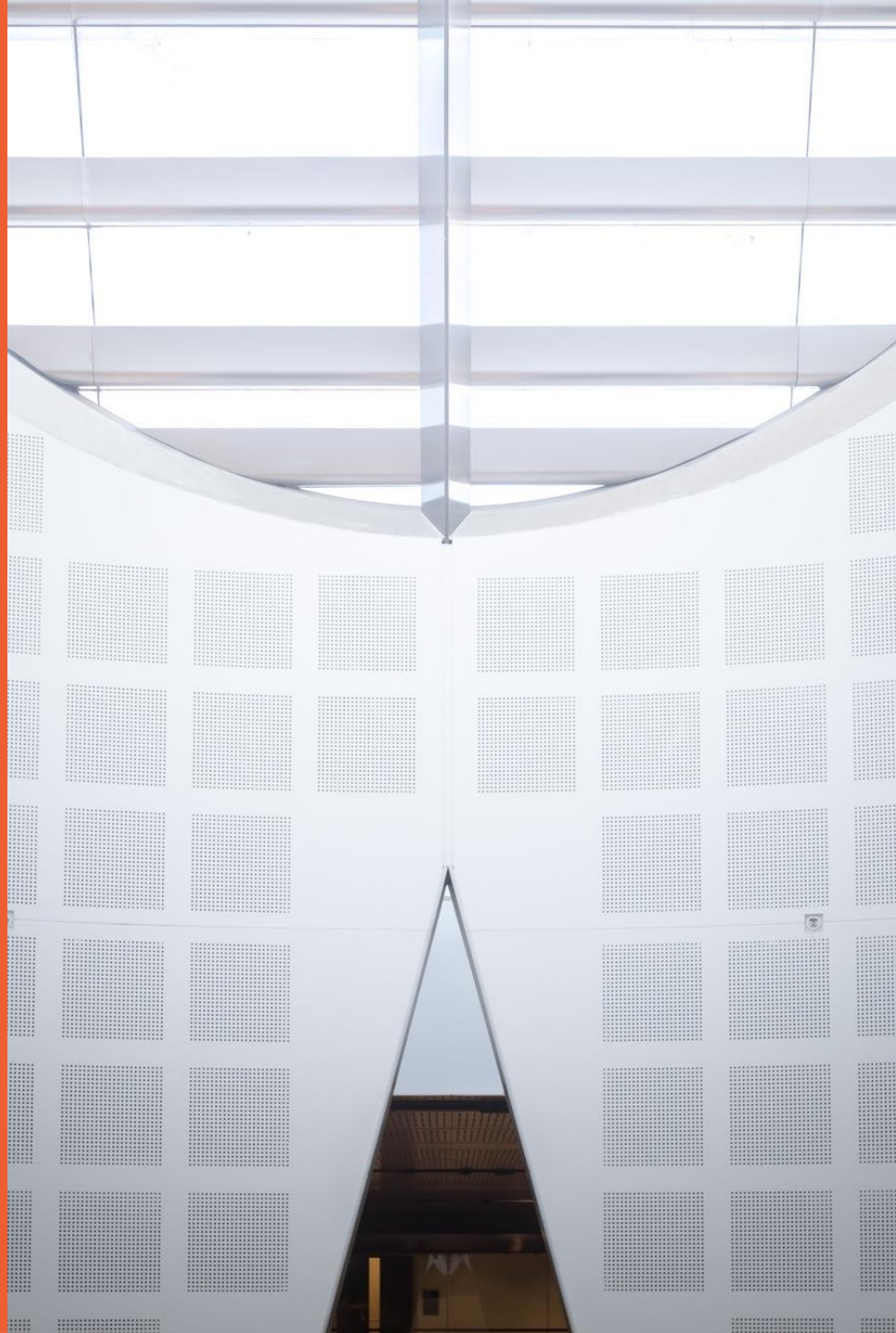

How do you do?

https://www.menti.com/alauvgp7btcy

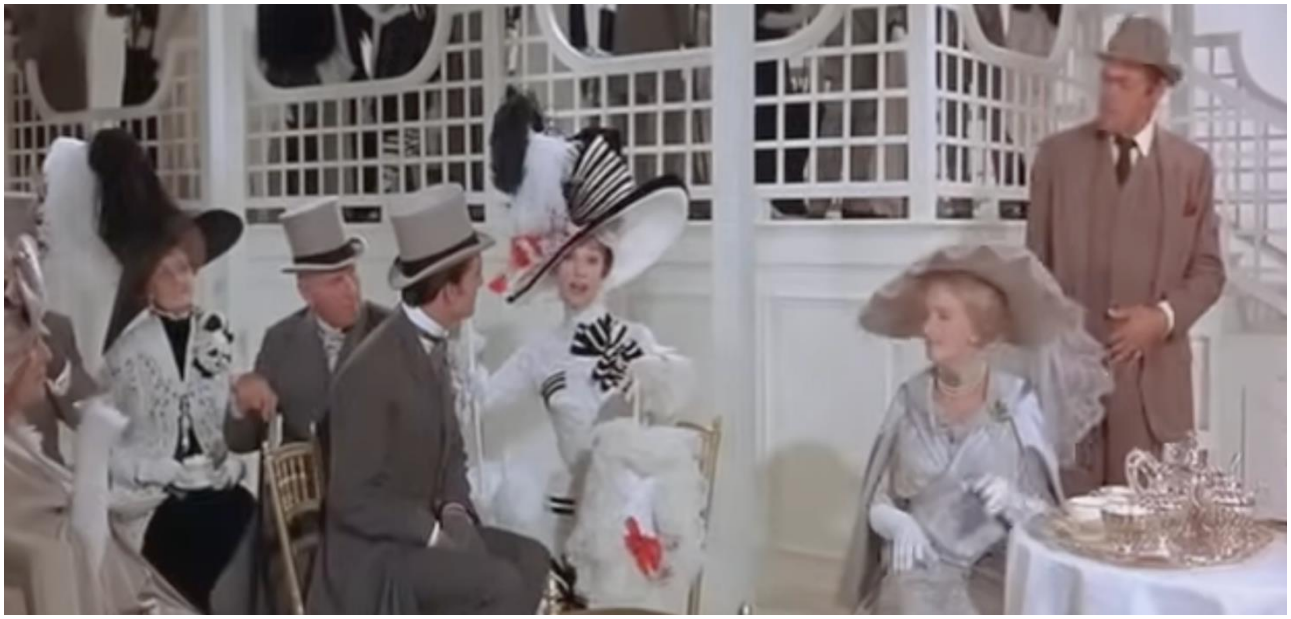

Recap

– Week1 Lecture content

Recap

- Lecture 1 covered the fundamentals of data structures, starting with an introduction to how data can be organized and managed efficiently.
- We explored the basics of Python, including variables, control flow, and functions, to build a foundation for implementing data structures.
- Big-O notation was introduced as a crucial concept for evaluating algorithm efficiency, covering common complexities to understand performance trade-offs.
- Finally, we discussed arrays as a fundamental data structure, exploring key operations such as access, insertion, deletion, and search.

Questions & Announcements

- Cannot find tutorial solutions…
  - Will be released next week
- Download lecture slides **AFTER** the lecture for the most up-to-date version. Look for the **Orange Colour** starting page

Abstract Data Type

- Abstract Data Type (ADT) defined in terms of its data items and associated operations, not its implementation
- An ADT is a specification of the desired behaviour from the point of view of the user of the data
- A data structure is a concrete representation of data, and this is from the point of view of an implementer, not a user
- Distinction is subtle but similar to the difference between a computation problem and an algorithm

Index-based List (List ADT)

– An index-based list (usually) supports the following operations:

– size()	(int) number of elements in the store
– isEmpty()	(Boolean) whether or not the store is empty
– get(i)	return element at index i
– set(i, e)	replace element at index i with element e, and return element that was replaced
– add(i, e)	inset element e at index i; existing elements with index >= i are shifted up
– remove(i)	remove and return the element at index i; existing elements with index >= I are shifted down

Array-based (Arrays)

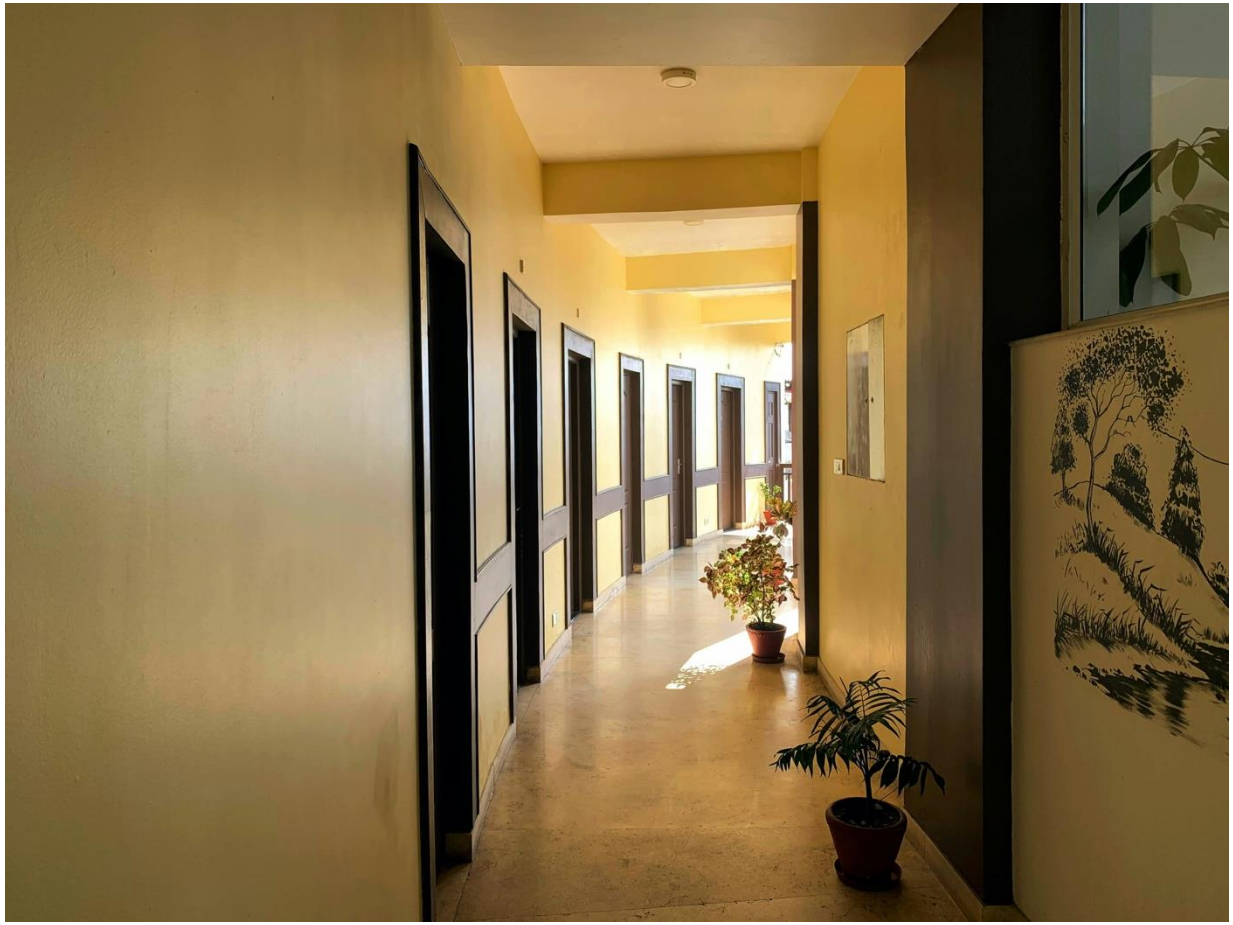

Photo by Niranjan udas from unsplash

Array-based (Arrays)

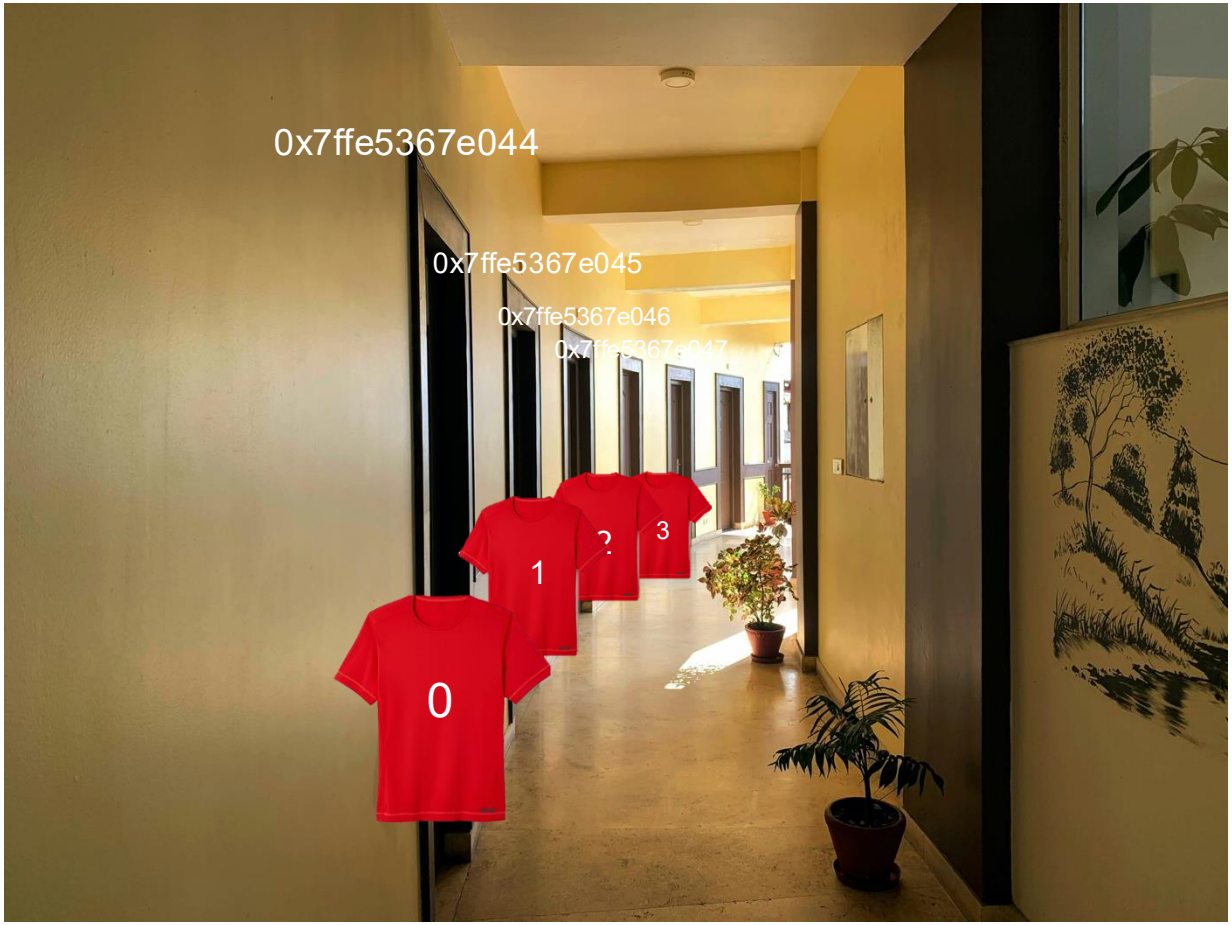

Photo by Niranjan udas from unsplash

Let’s look into it deeper

Array-based Lists: get(i)

- An option for implementing the list ADT is to use an array A, where A[i] stores (a reference to) the element with index i

- If array has size N then we can represent lists of size n <= N

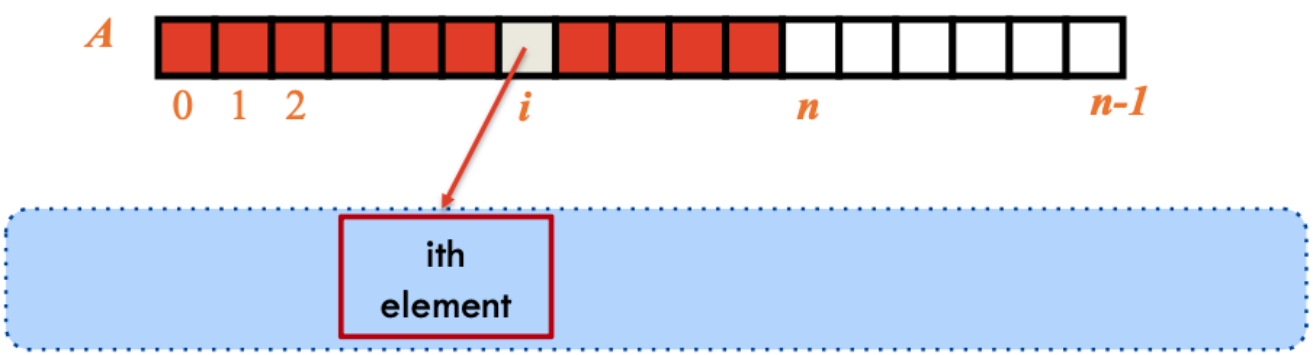

Array-based Lists: get(i)

- The get(i) and set(i, e) methods are easy to implement by accessing A[i]

- Must check that I is a legimit index (0 <= I < n)

- Both operation can be carried in constant time (a.k.a) O(1) time), independent of the size of the array

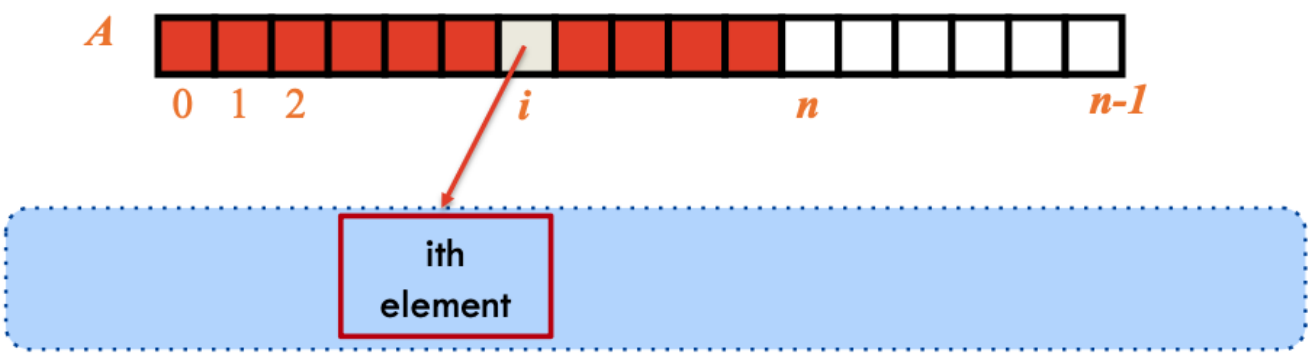

Array-based Lists: set (i, e)

- The get(i) and set(i, e) methods are easy to implement by accessing A[i]

- Must check that i is a legitimate index (0 <= i < n)

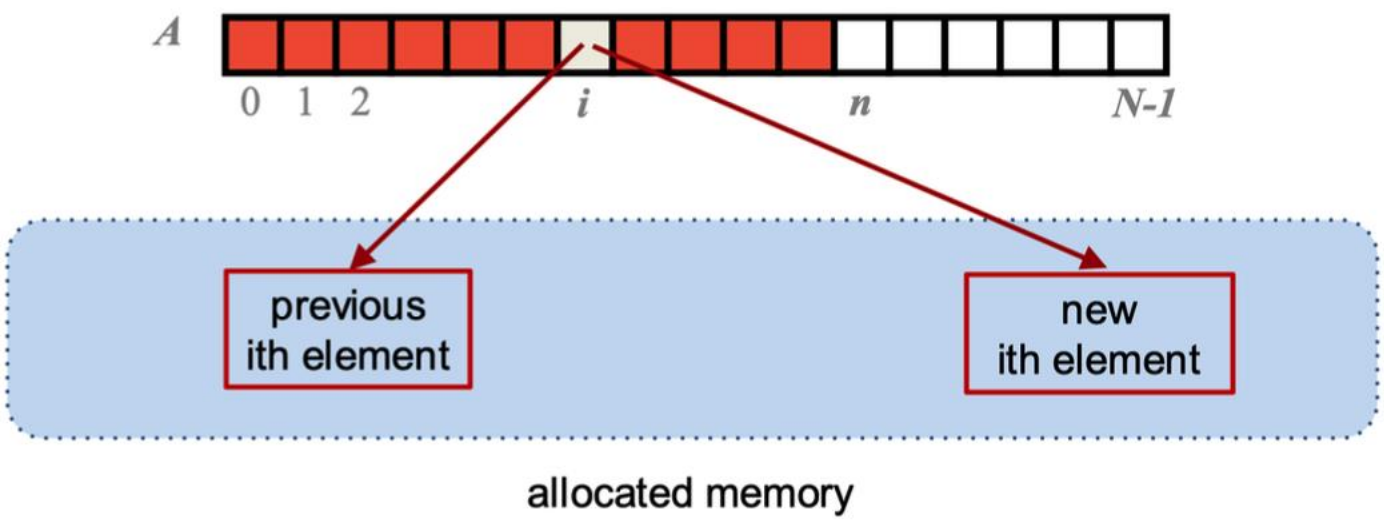

How fast is get and set in an Array?

Not like this exactly

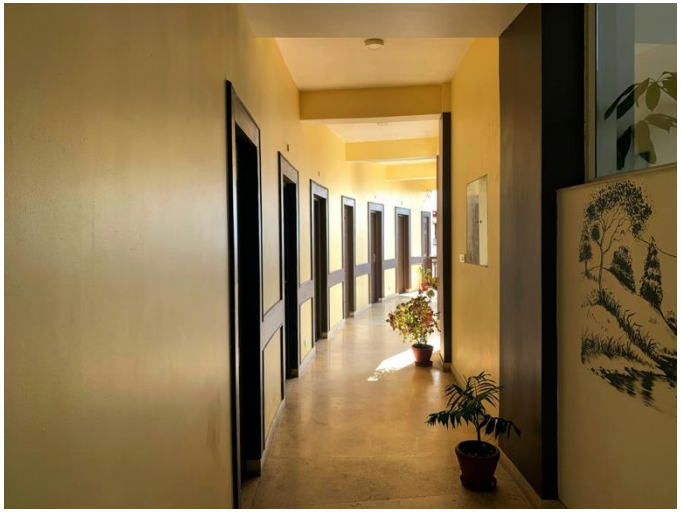

More like this

Array-based List: add(i, e)

- In an operation add(i, e), we must make room for the new element by shifting forward n – i elements A[i], … , A[n – 1]
- Must check that there is a space (n < N)

- What is the most time consuming scenario?

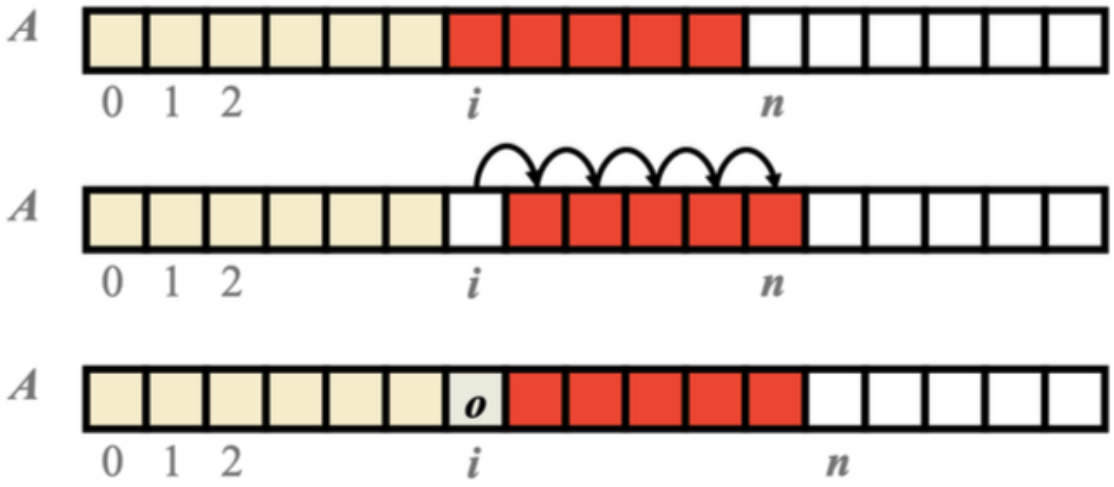

Array-based Lists: remove(i)

- In an operation remove(i), we need to fill the hole left at position i by shifting backward n - i - 1 elements A[i+1],…,…, A[n-1]
- Must check that i is a legitimate index (0 <= i < n)

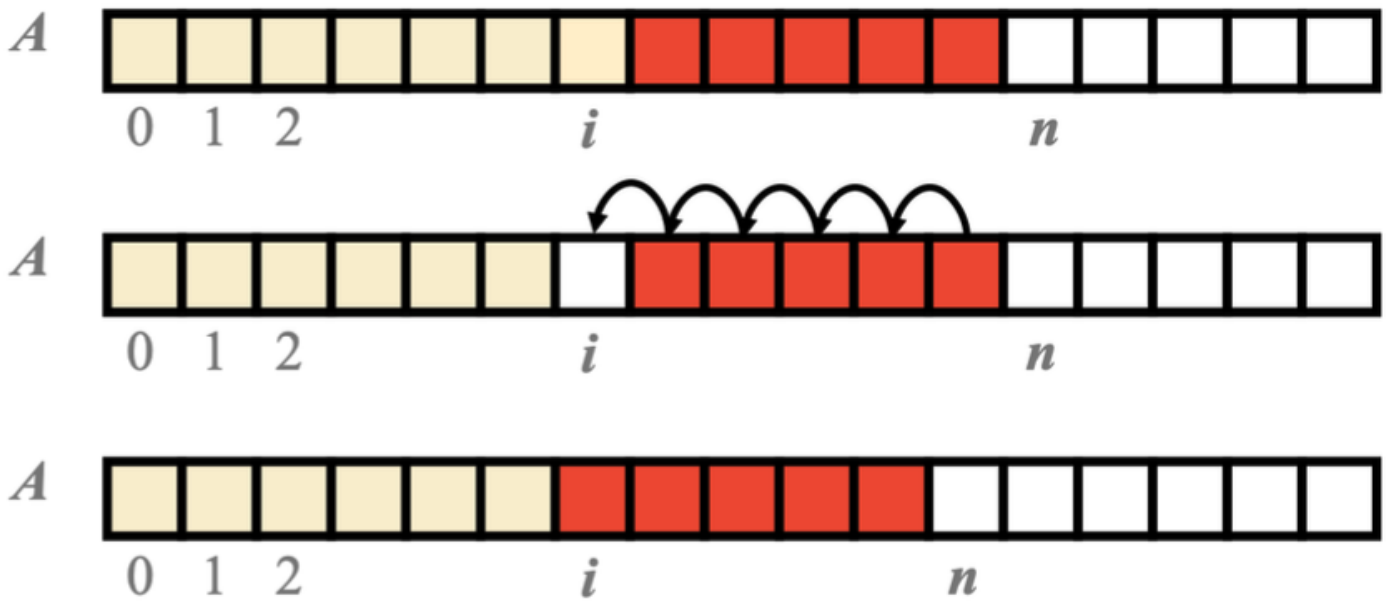

Summary of (static) array-based Lists

- Limitations:
  - Can represent lists up to the capacity of the array (n vs N)

- Space complexity:
  - Space used is O(N), whereas we would like it to be O(n)

- Time complexity:
  - Both get and set take O(1) time
  - Both add and remove take O(n) time in the worse case

What is the solution to these limitations?

What is the solution to these solution?

What do you do at your pen and paper exam?

THE UNIVERSITY OF SYDNEY

CONFIDENTIAL EXAM PAPER

This paper is not to be removed from the exam venue

Computer Science

EXAMINATION

COMP9120 Database Management Systems

Solution

Will contiue on page 14

Part2 of my answer to question 10.1

How did travellers cook bread while travelling in ancient times?

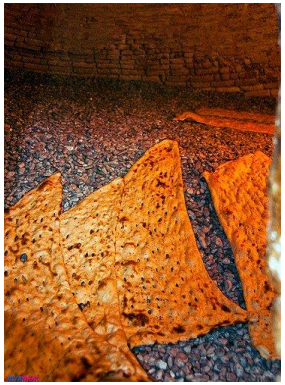

Linked Lists

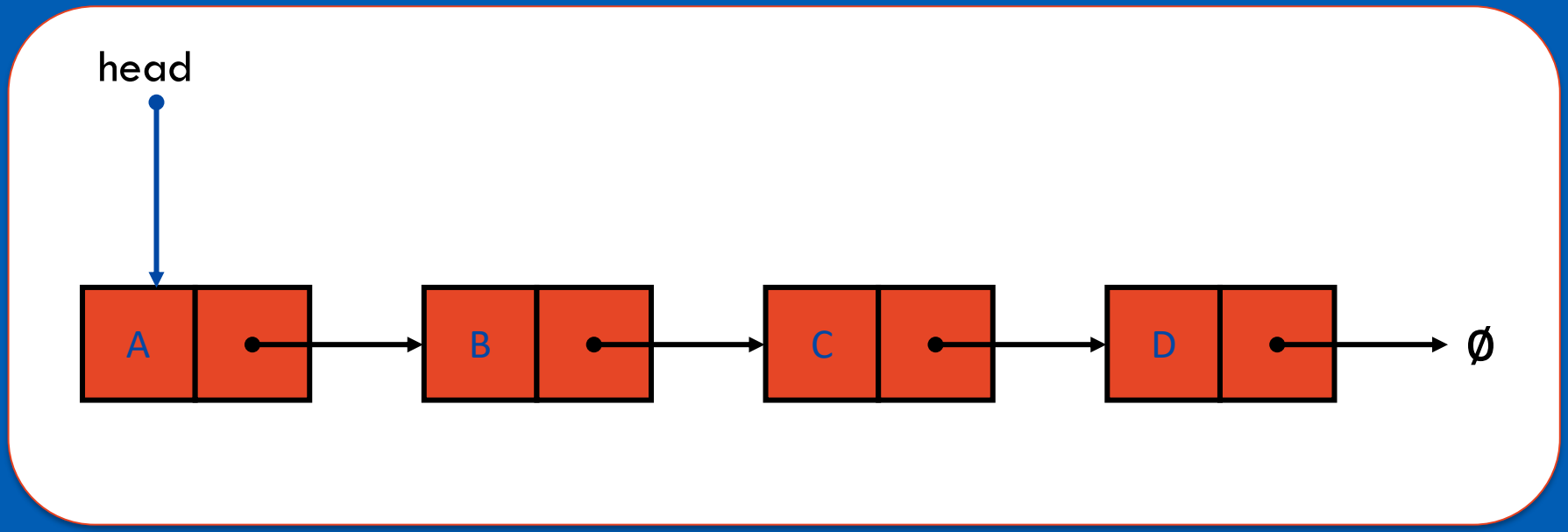

THE UNIVERSITY OF SYDNEY

Staying at hotel as a Linked List

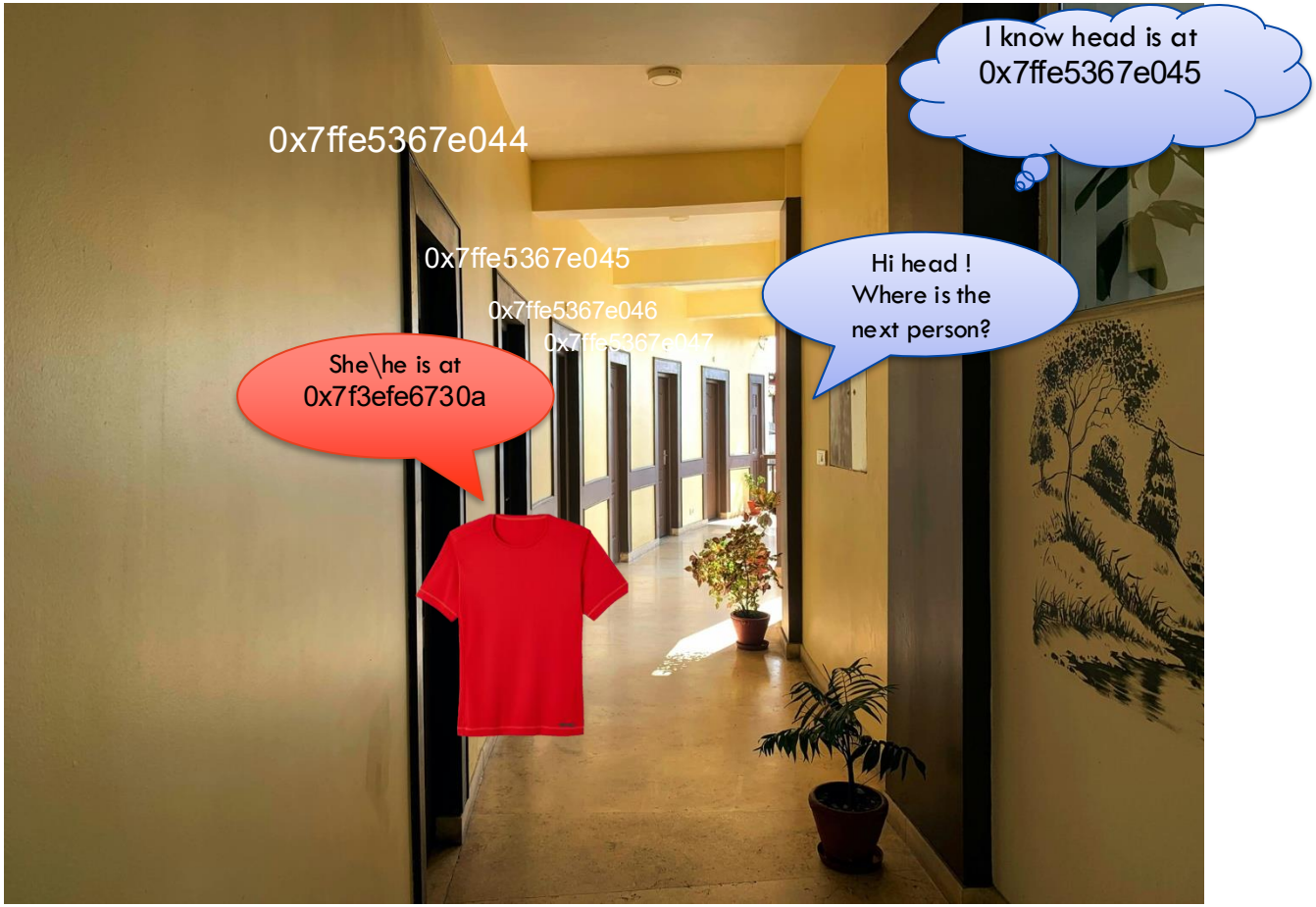

Photo by Niranjan udas from unsplash

Linked List?

A Linked List is a linear data structure that is used to store a collection of data with the help of nodes.

Key Characteristics:

- The consecutive elements (nodes) are connected by pointers/references.
- The last node of the linked list points to None/Null.
- The entry point of a linked list is known as the head.
- The common types of linked lists are Singly, Doubly and Circular.

How are Linked Lists Stored?

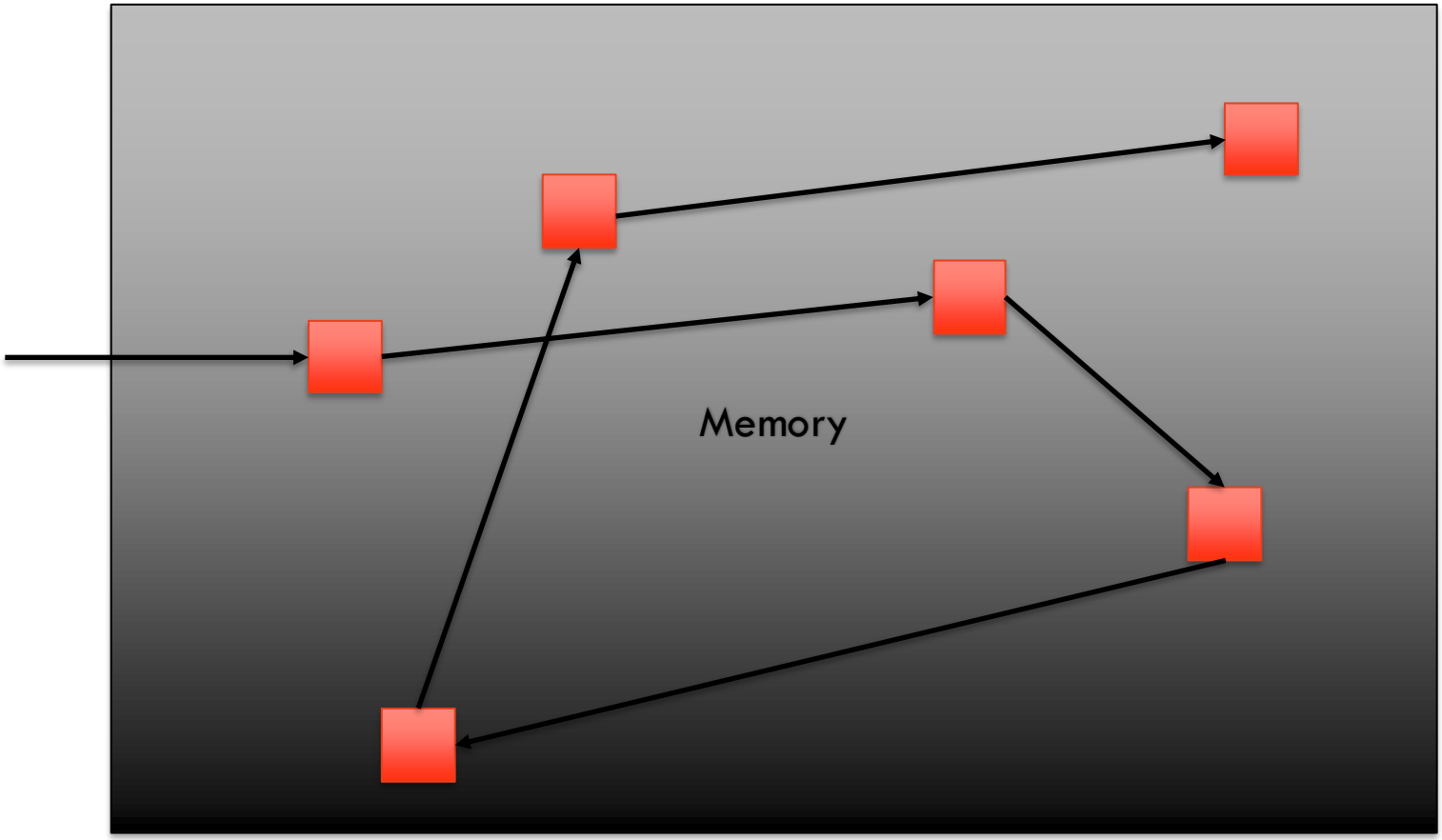

Why Linked Lists?

Dynamic Sizing:

- Unlike arrays, linked lists do not require a predefined size. They can grow and shrink efficiently as needed without reallocating memory. The last node of the linked list points to None.

Flexible Memory Allocation:

- Linked lists use scattered memory blocks instead of requiring contiguous memory allocation like arrays. This reduces memory fragmentation and makes better use of available space.

No Wasted Space

- Since linked lists allocate memory dynamically, they avoid the issue of wasted space in arrays where unused slots may remain empty.

Singly Linked Lists

Singly Linked List

- A concrete data structure
- A sequence of Nodes, each with a reference to the next node
- List captured by reference (head) to the first Node

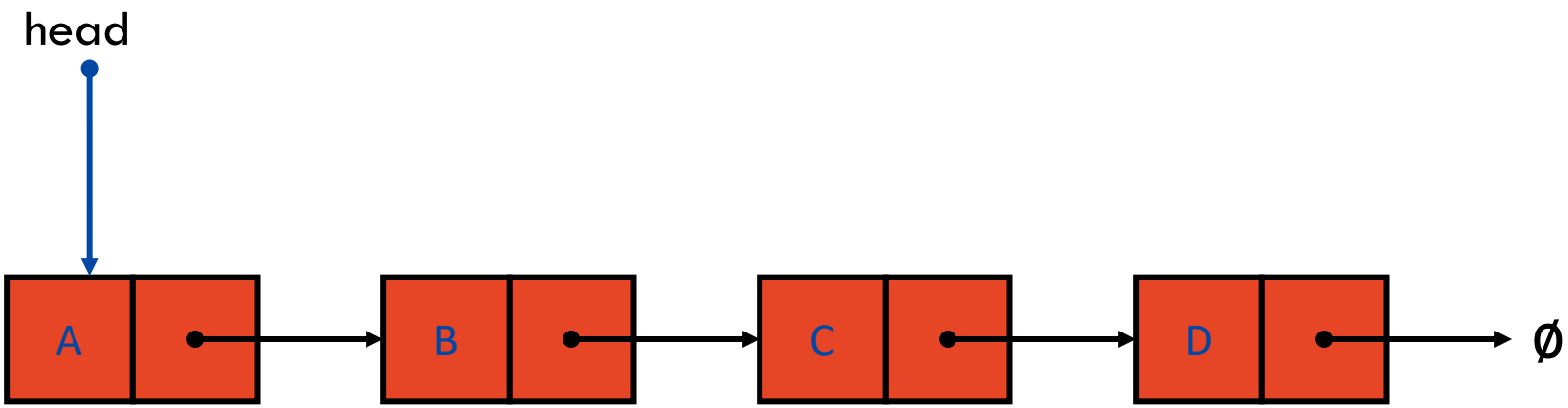

Node implements Position

Each Node in a singly linked List stores

- its data, and
- a link to the next node.

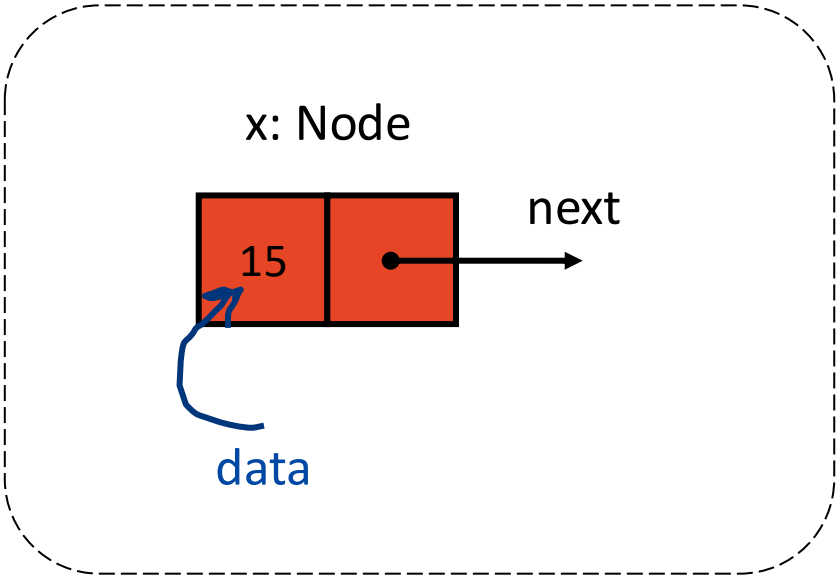

Advice on working with linked structures

- Draw the diagram showing the state.
- Show a location where you place carefully each of the instance variables (including references to nodes).
- Be careful to step through dotted accesses.
  - Example: p.next.next
- Be careful about assignments to fields.
  - Example: p.next = q or p.next.next = r

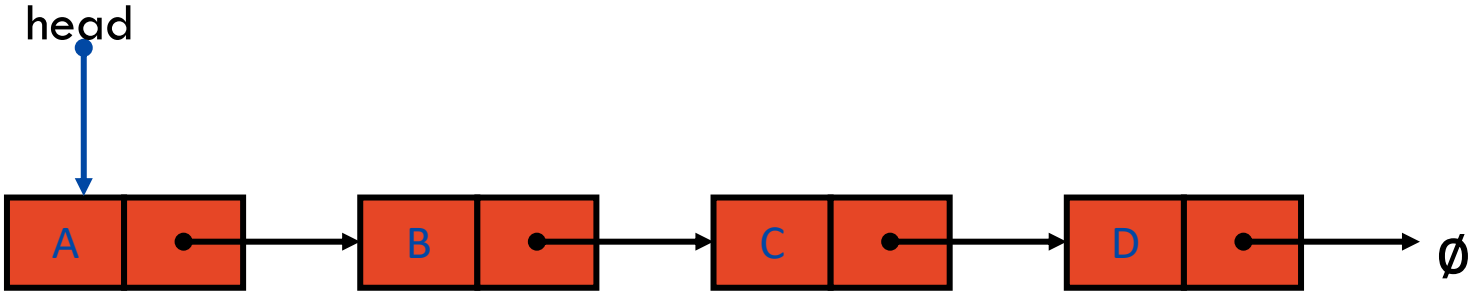

Operations on Singly Linked List

- Traversal

- Insertion
  - Insert at the beginning
  - Insert at the end
  - Insert at a specific position
- Deletion
  - Delete from the beginning
  - Delete from the end
  - Delete a specific node

Traversal

Singly Linked List

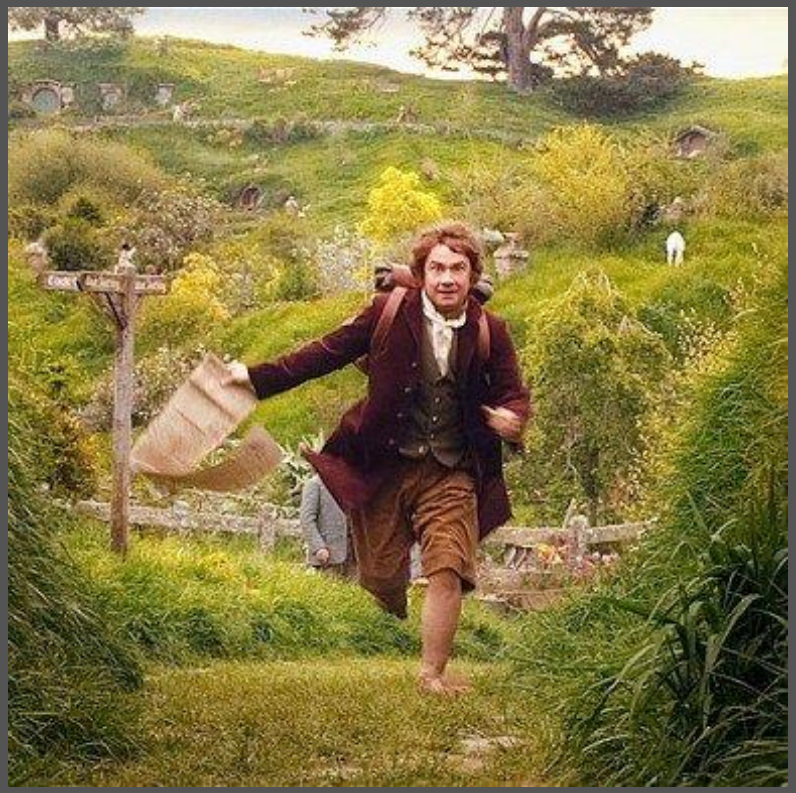

THE UNIVERSITY OF SYDNEY

Traversal

Traversal of a Singly Linked List is one of the fundamental operations, where we traverse or visit each node of the linked list.

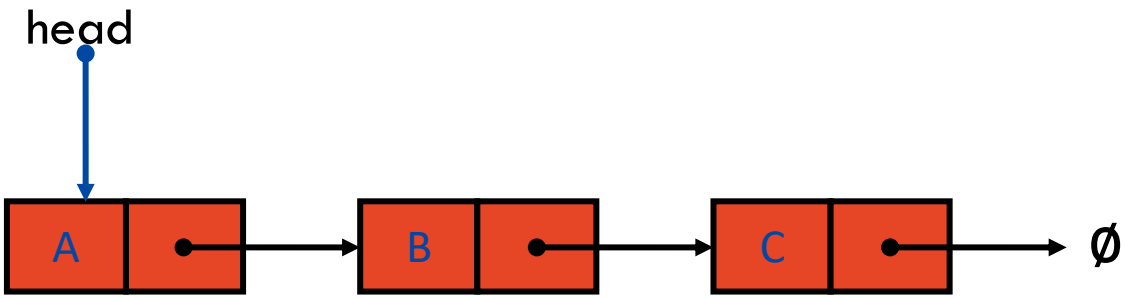

Traversal (Step 01)

1. Store the current head node in a temporary variable

   current = head

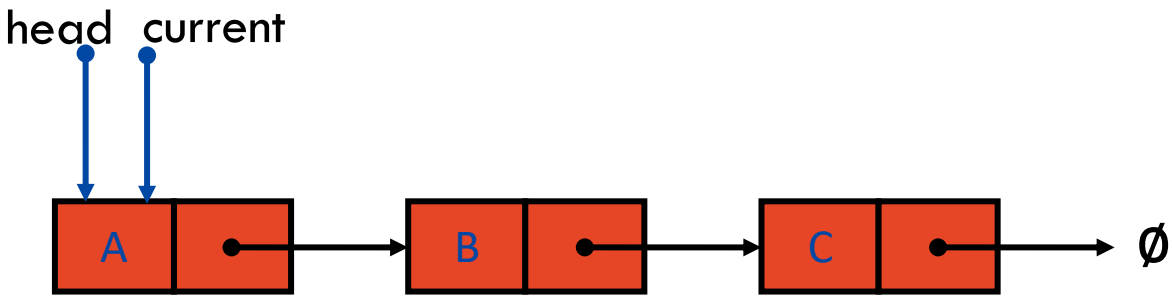

Traversal (Step 02)

2. Traverse the list until the last node is reached

```
current = head
while (current != None) {
    print(current.data)
    current = current.next
}
```

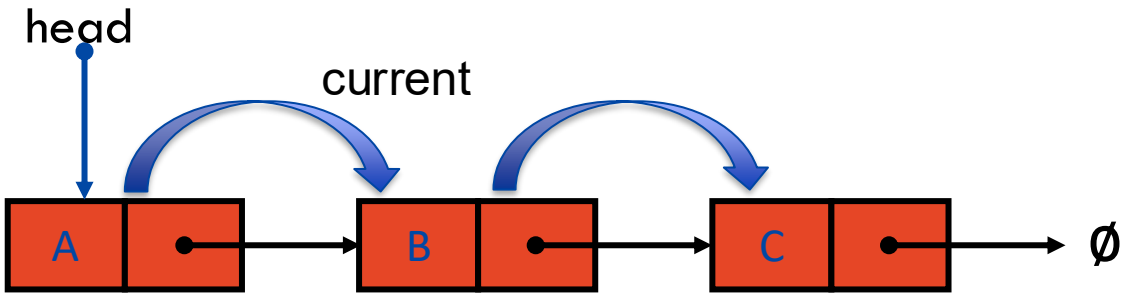

Insertion

Singly Linked List

THE UNIVERSITY OF SYDNEY

Insert at the Beginning (Step 01)

1. Create a new node with data x

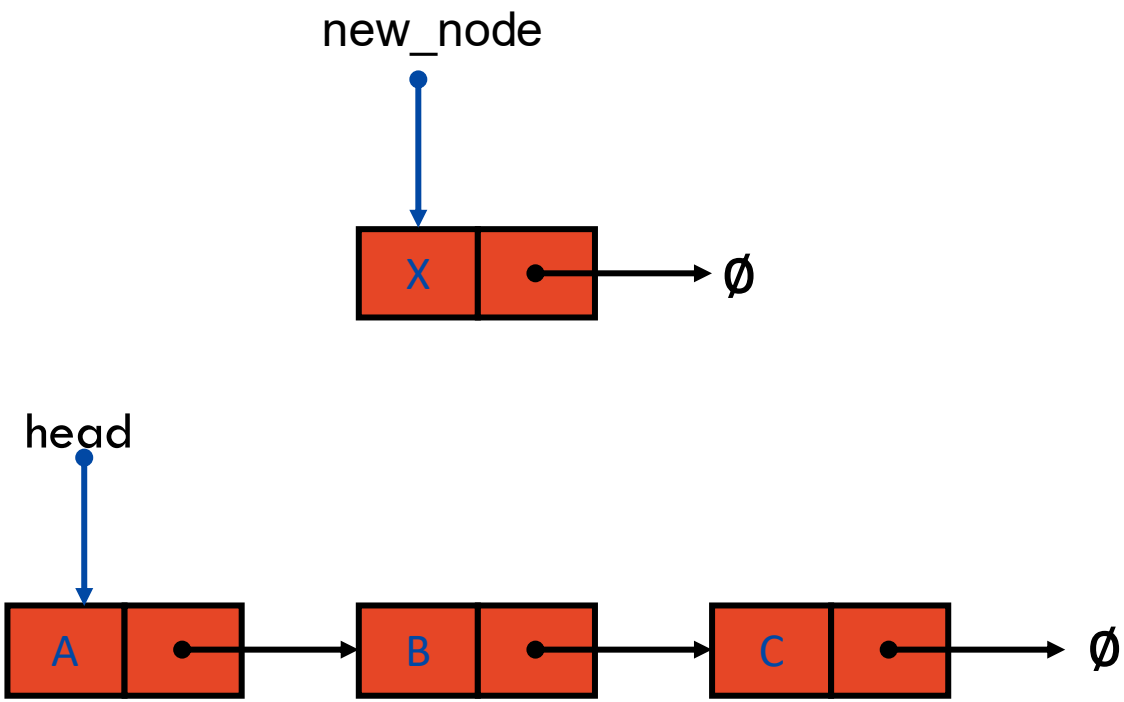

Insert at the Beginning (Step 02)

2. Set the next pointer of new node to the current head

   new_node.next = head

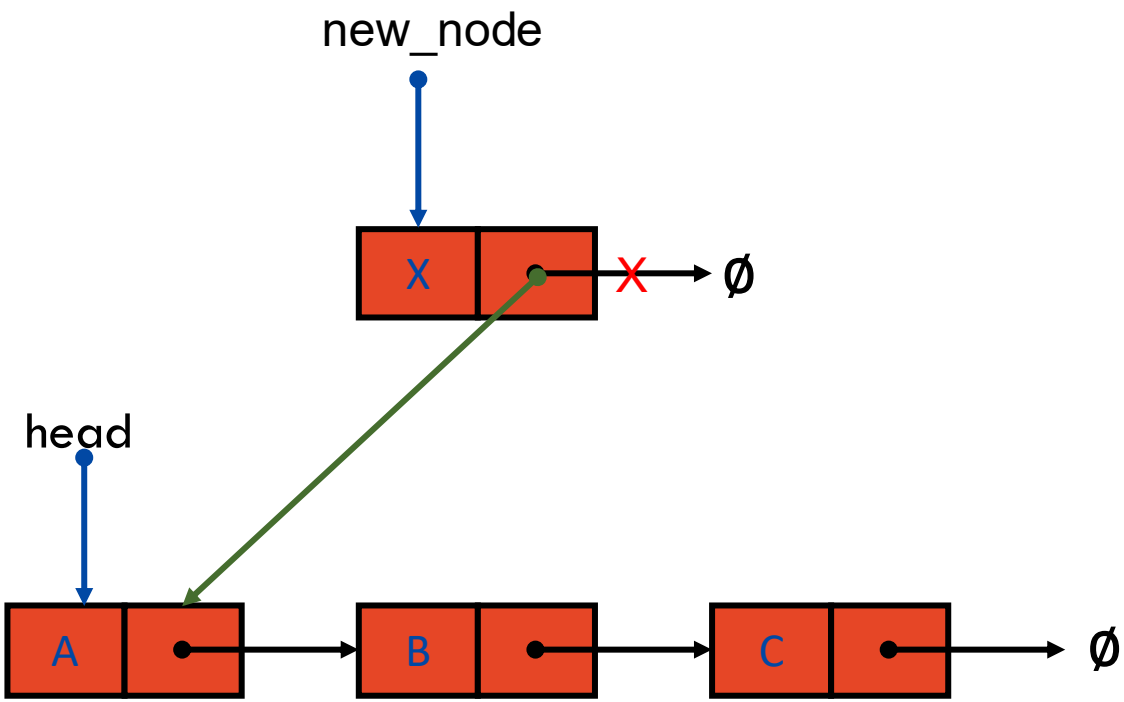

Insert at the Beginning (Step 03)

3. Move the head to point to the new node

   head = new_node

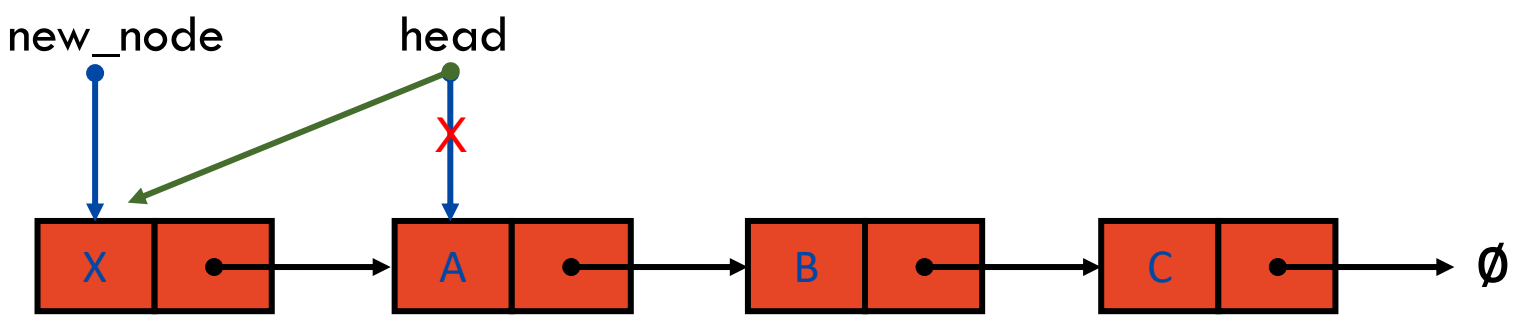

Insert at the Beginning (Result)

1. Create a new node with data x
2. Set the next pointer of new node to the current head
3. Move the head to point to the new node

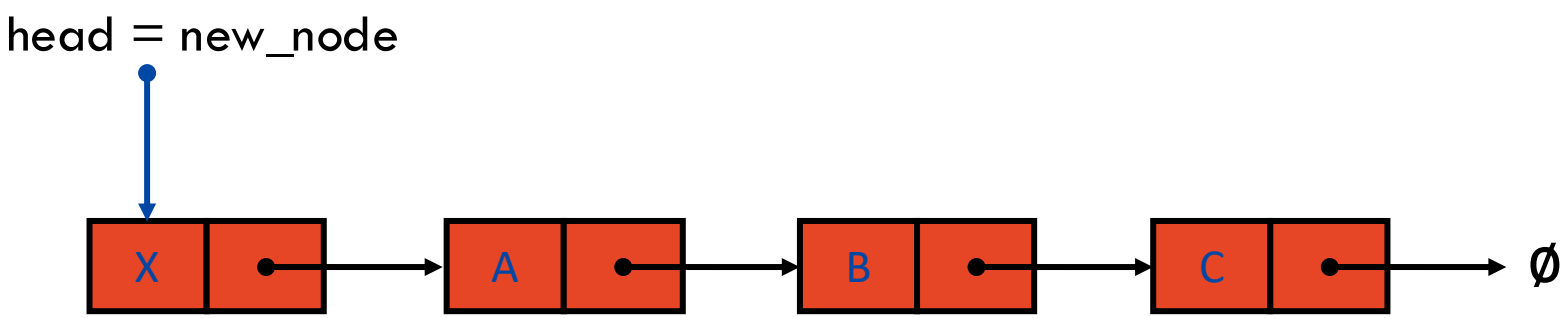

Insert at the End (Step 01)

1. Create a new node with data x

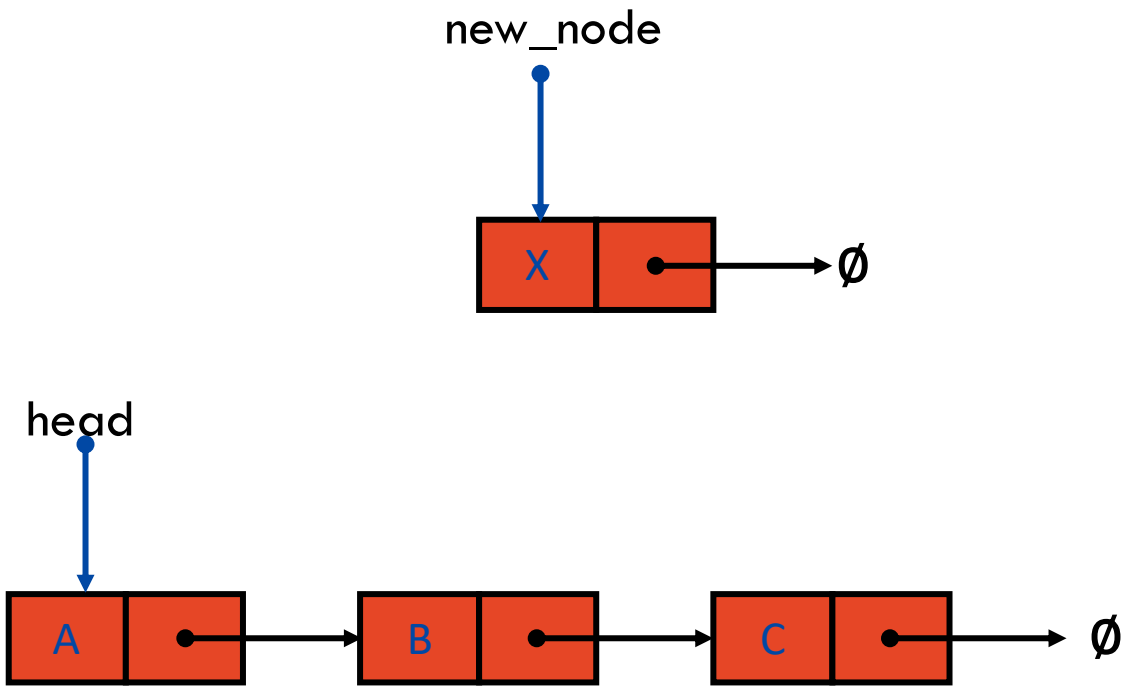

Insert at the End (Step 02)

2. Traverse the list until the last node is reached

```
current = head
while (current.next != None) {
    current = current.next
}
```

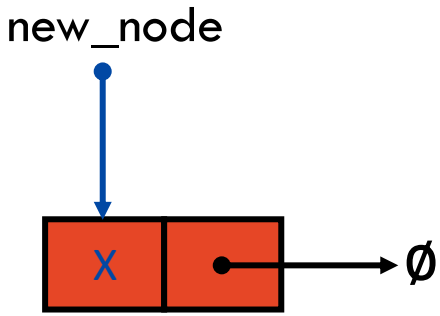

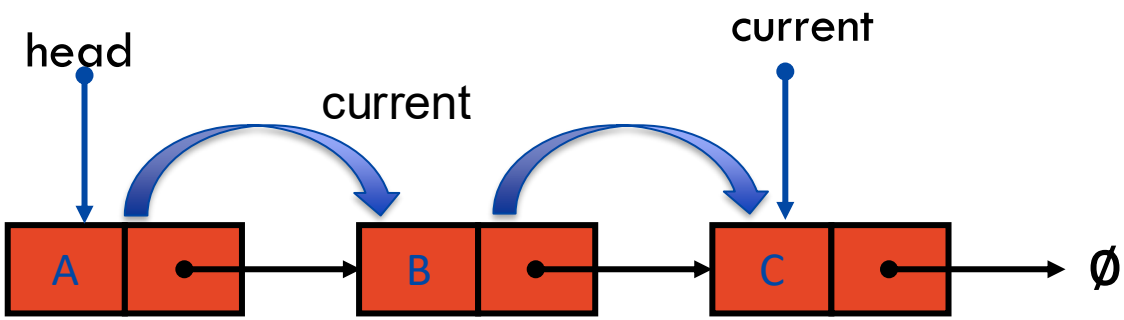

Insert at the End (Step 03)

3. Link the new node to the current last node

current.next = new_node

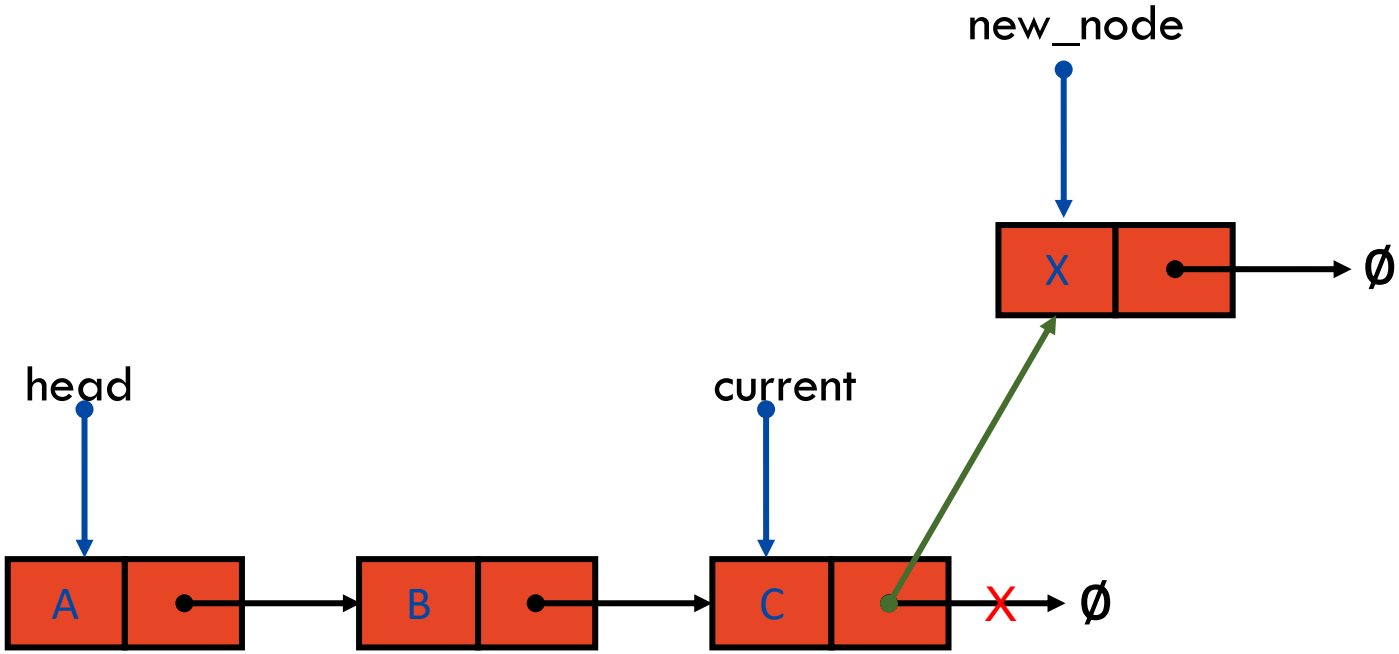

Insert at the End (Result)

1. Create a new node with data x
2. Traverse the list until the last node is reached
3. Link the new node to the current last node

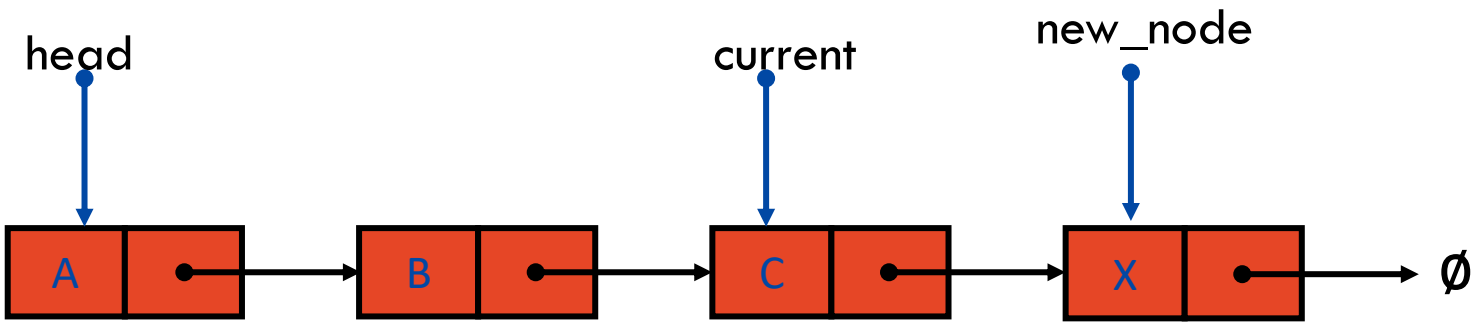

Insert at a Specific Position (Step 01)

1. Create a new node with data x

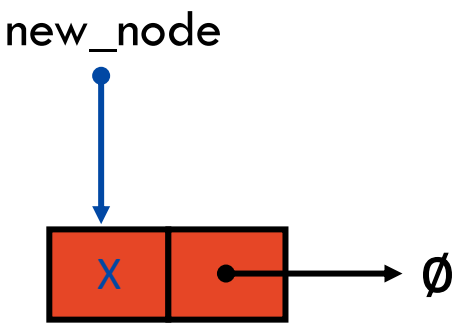

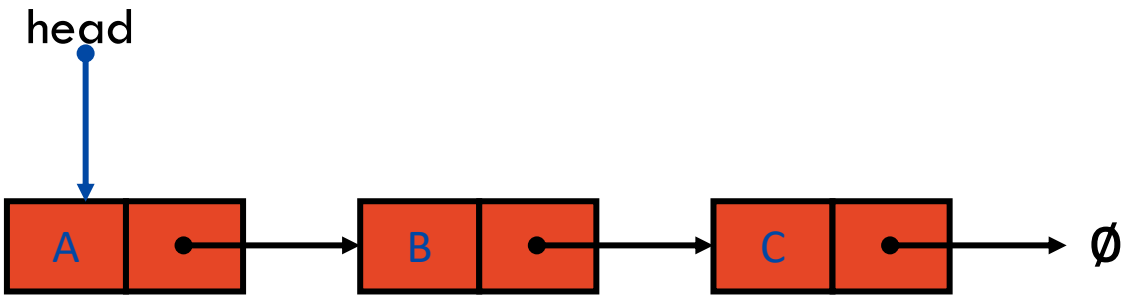

Insert at a Specific Position (Step 02)

2. Traverse the list to the desired position (i)

```
current = head
int count = 0
while (count < i-1 AND current != None) {
    current = current.next
     count++
}
```

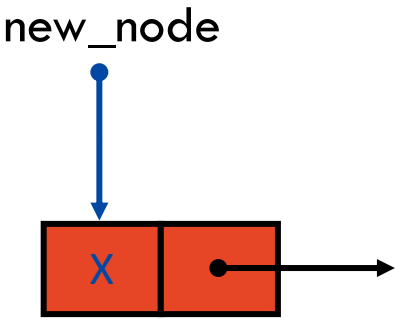

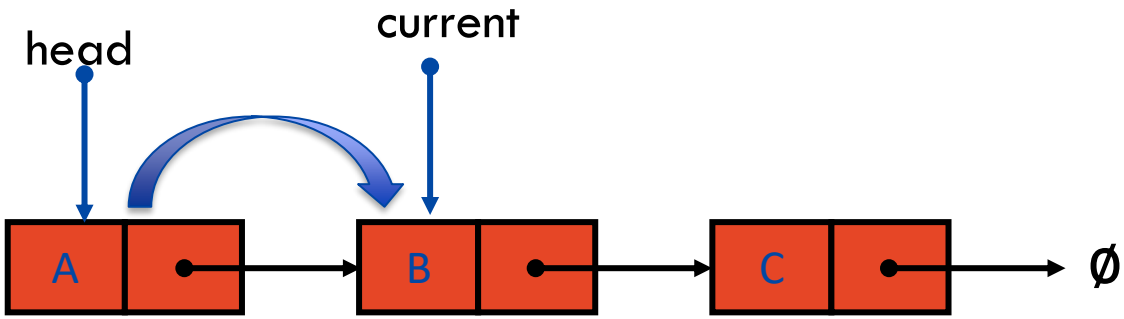

Insert at a Specific Position (Step 03)

3. Link the new node to the current last node

new_node.next = current.next

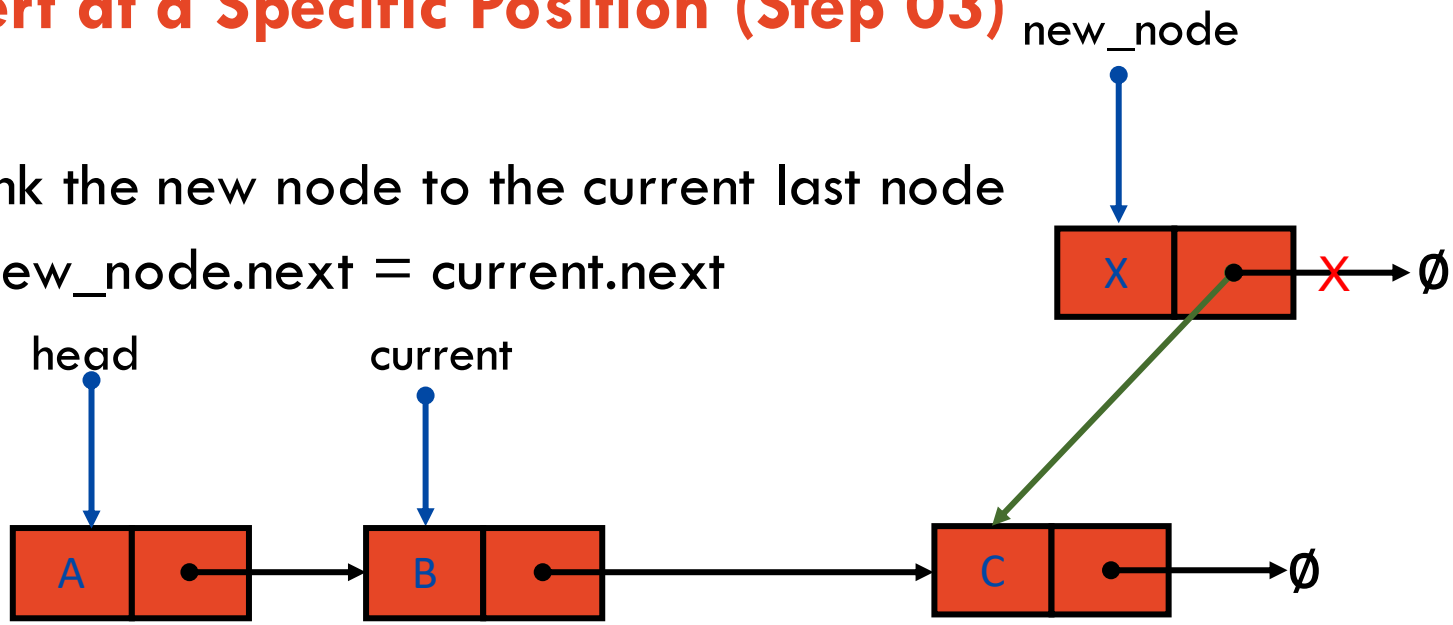

current.next = new_node

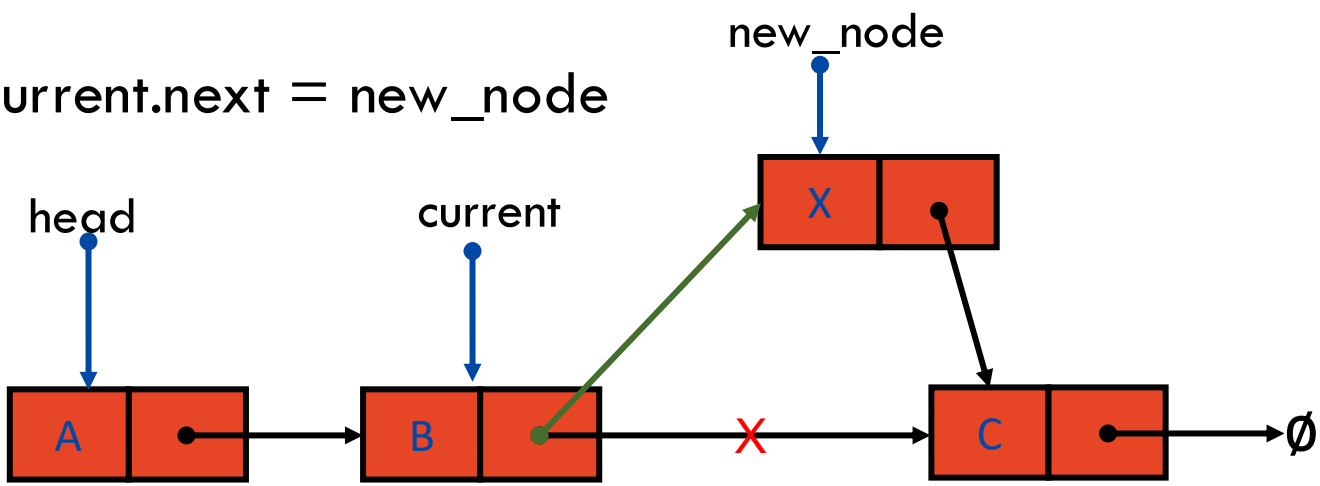

Insert at a Specific Position (Result)

1. Create a new node with data x
2. Traverse the list to the desired position (i)
3. Link the new node to the current last node

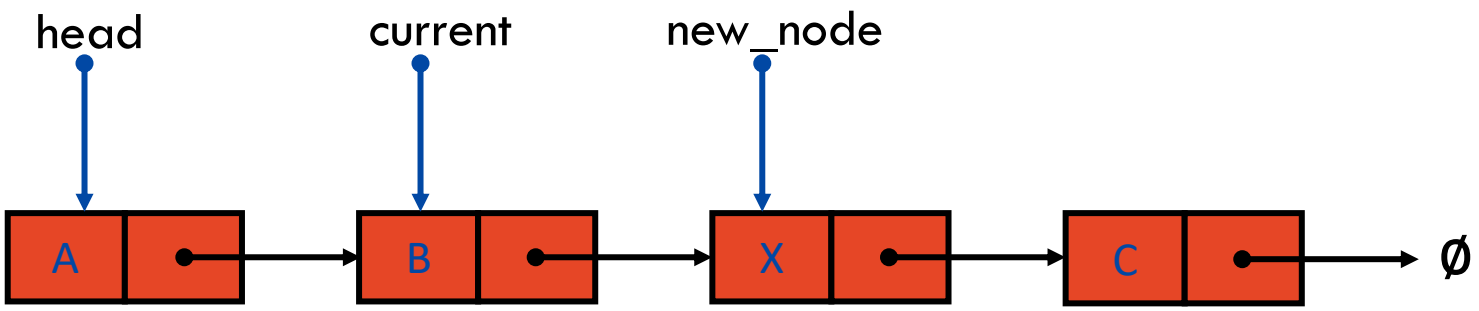

Not exam-able, I need to seek your opinion

https://www.menti.com/albt38kvs3r1

Break!

– Menti!

https://www.menti.com/alnctq6m3nxj

Deletion

Singly Linked List

THE UNIVERSITY OF SYDNEY

Deletion at the Beginning (Step 01)

1. Store the current head node in a temporary variable

   temp = head

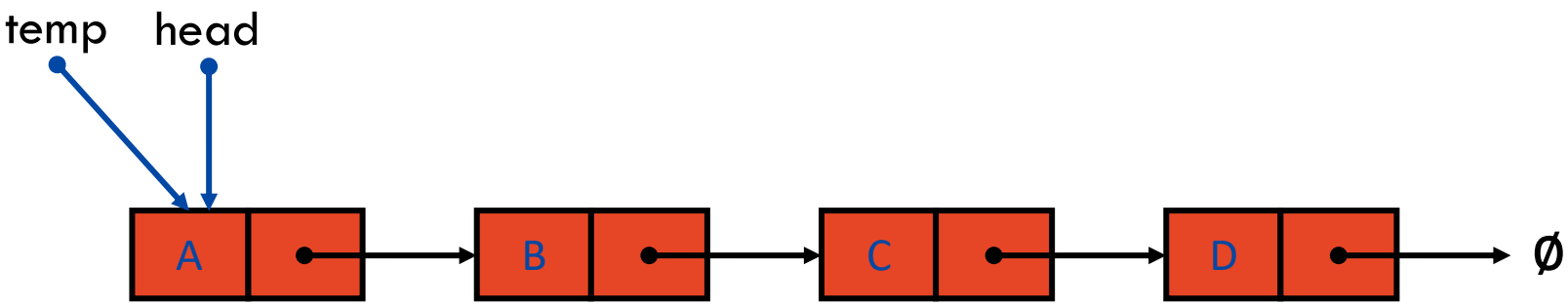

Deletion at the Beginning (Step 02)

2. Move the head pointer to the next node

head = head.next

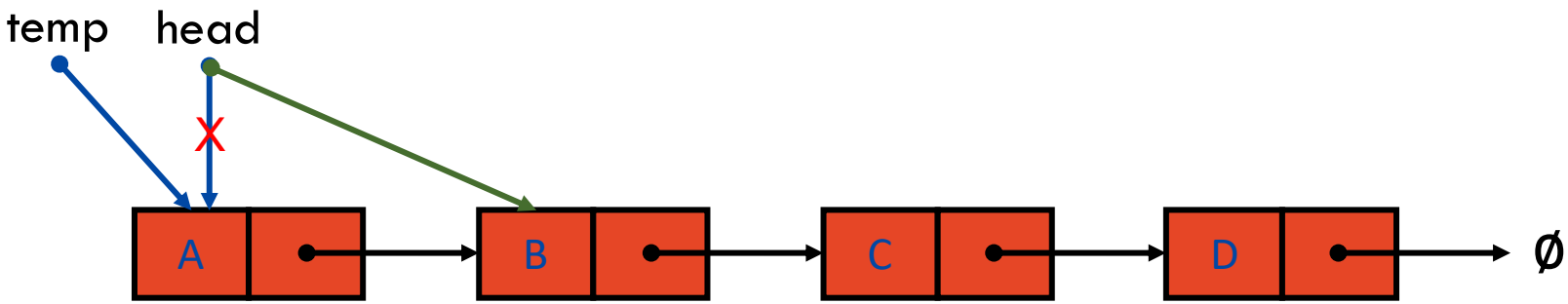

Deletion at the Beginning (Step 03)

3. Remove the link from the temp node

temp.next = None

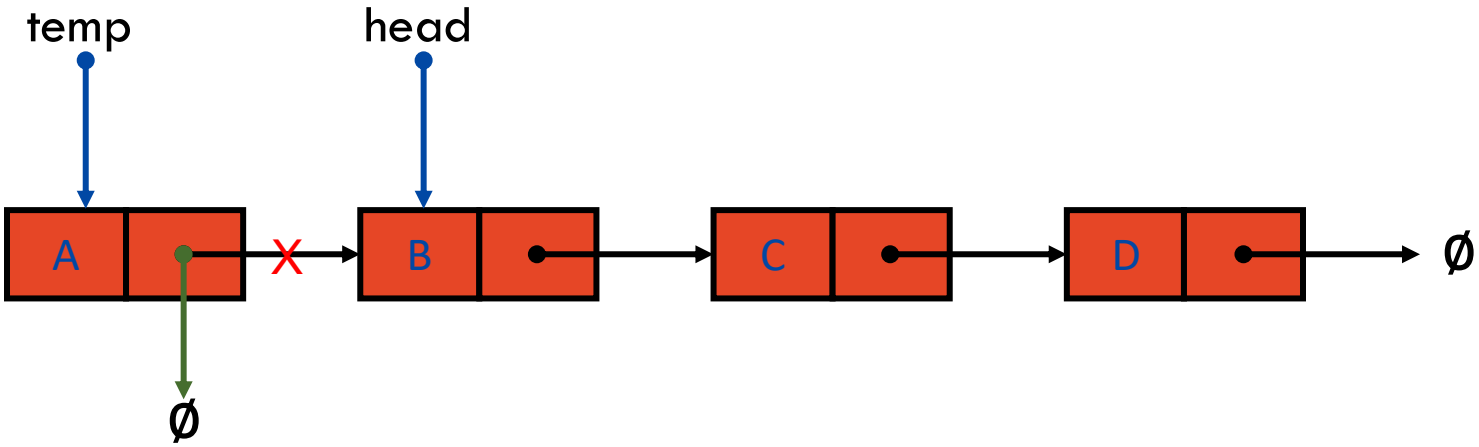

Deletion at the Beginning (Result)

1. Store the current head node in a temporary variable
2. Move the head pointer to the next node
3. Remove the link from the temp node

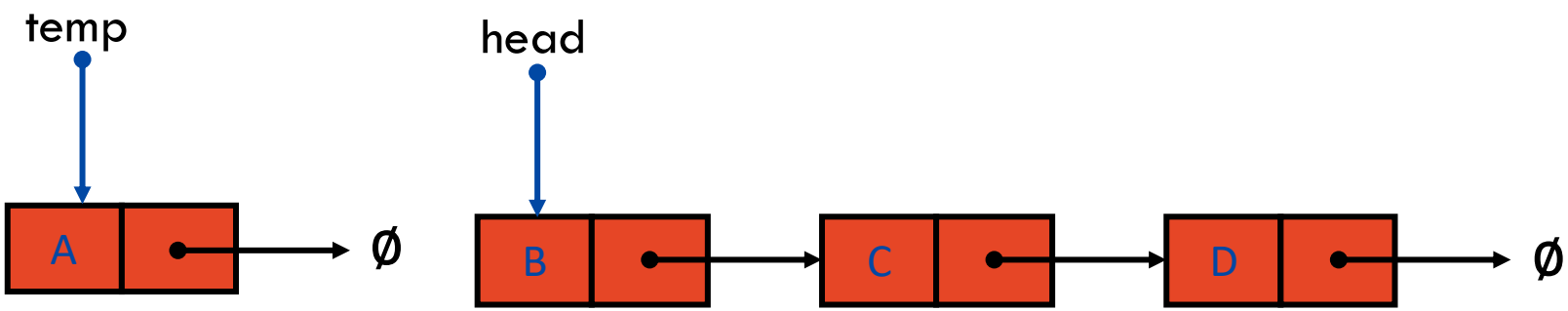

Deletion at the End (Step 01)

1. Traverse the list to find the second last node

```
current = head
while (current.next.next != None){
    current = current.next
}
```

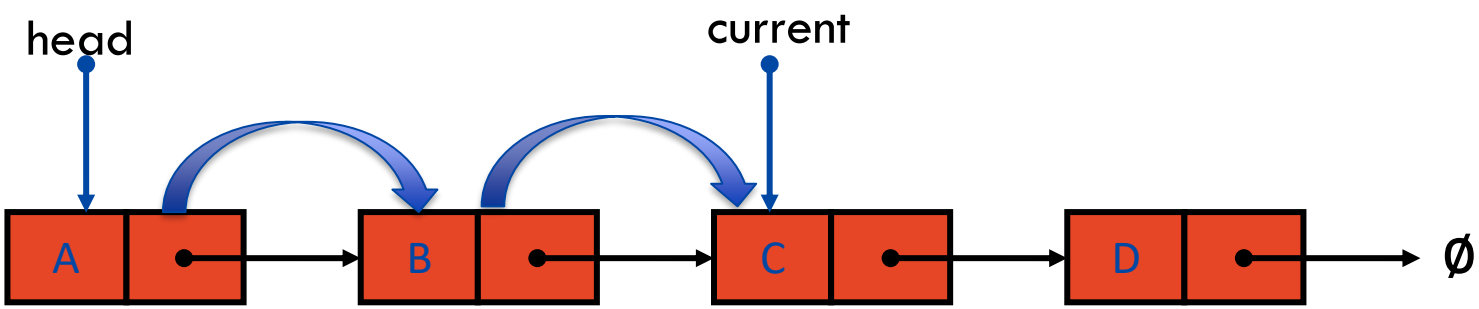

Deletion at the End (Step 02)

2. Remove the link to last node

current.next = None

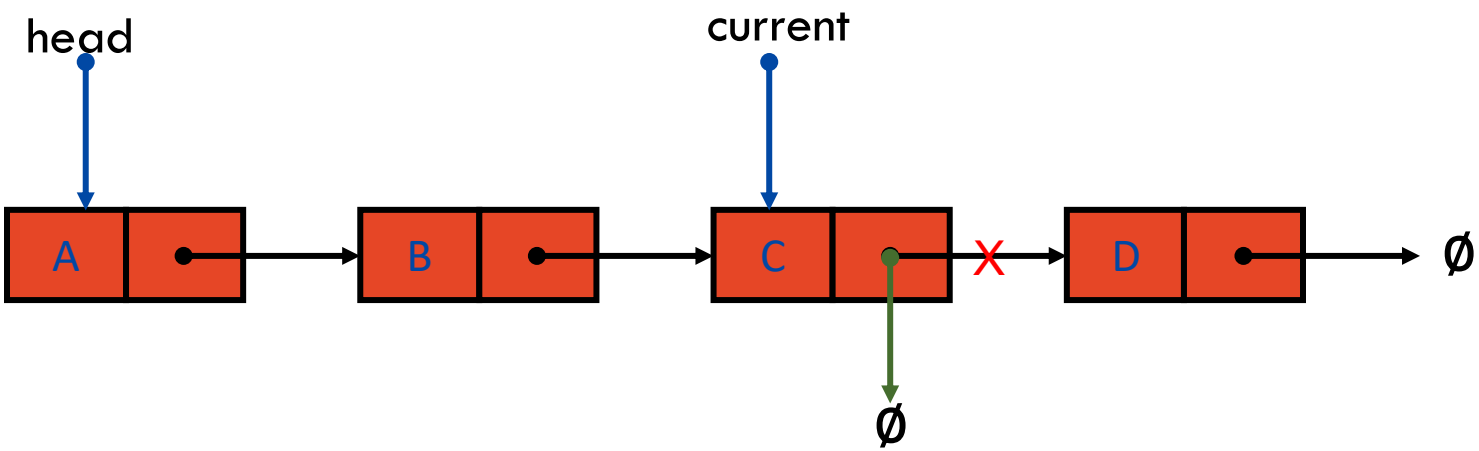

Deletion at the End (Result)

1. Traverse the list to find the second last node
2. Remove the link to last node

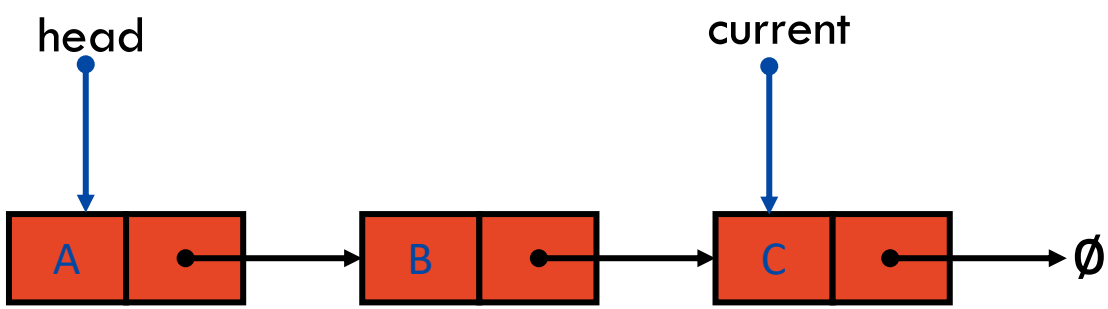

Deletion at Specific Position (Step 01)

1. Traverse to the node before the position to be deleted

```
current = head
count = 0
while (count < index-1 AND current.next != None){
    current = current.next
    count++
}
```

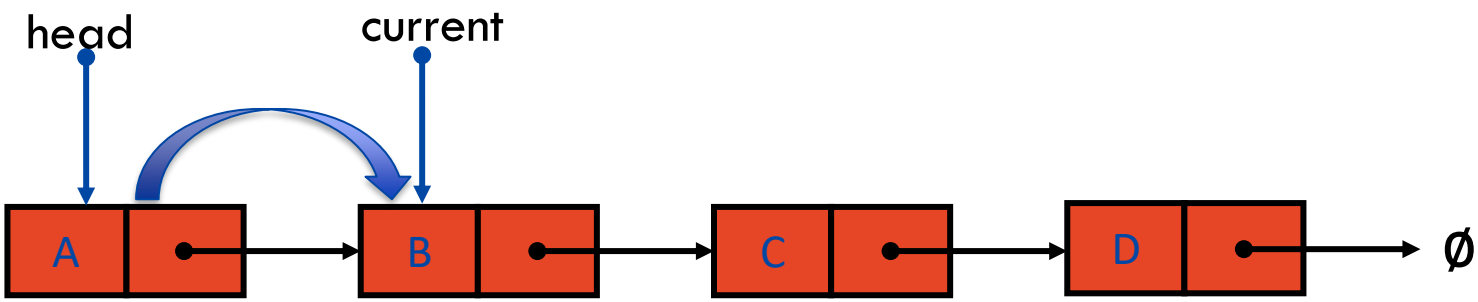

Deletion at Specific Position (Step 02)

2. Store the node to be deleted

temp = current.next

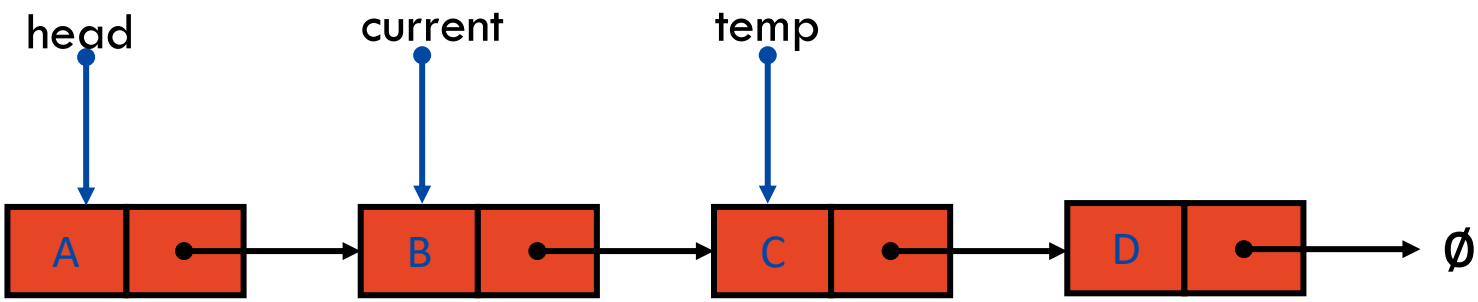

Deletion at Specific Position (Step 03)

3. Update the links to remove the node

current.next = temp.next

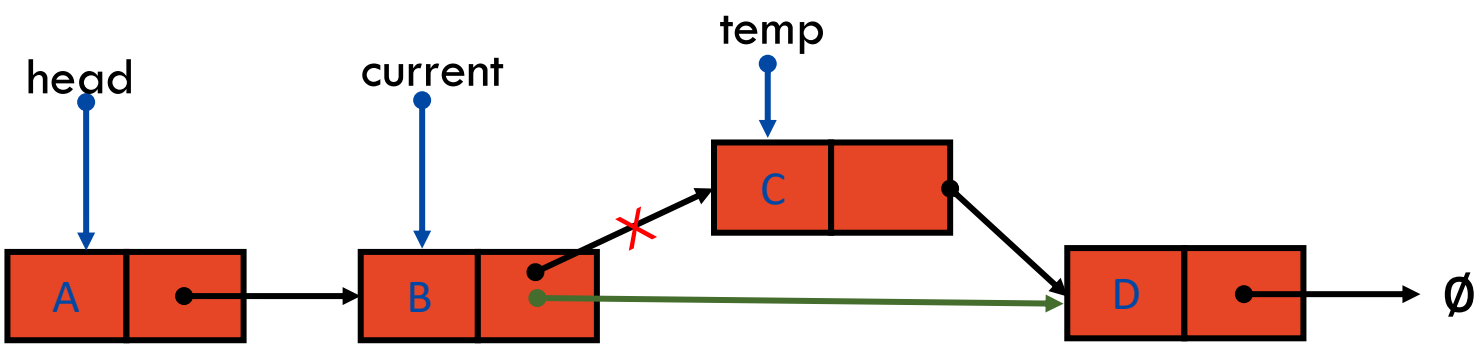

Deletion at Specific Position (Step 04)

4. Remove the link from the temp node

temp.next = None

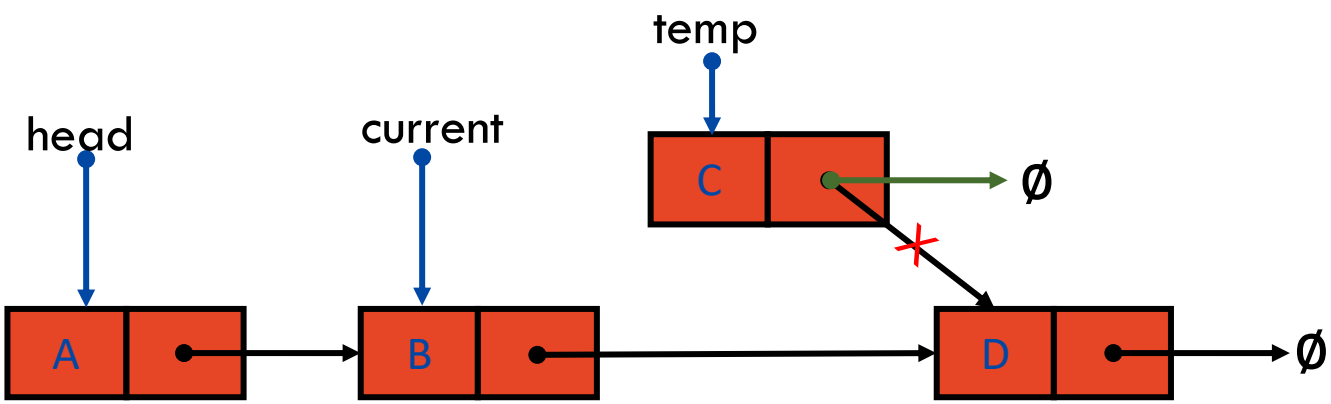

Deletion at Specific Position (Result)

1. Traverse to the node before the position to be deleted
2. Store the node to be deleted
3. Update the links to remove the node
4. Remove the link from the temp node

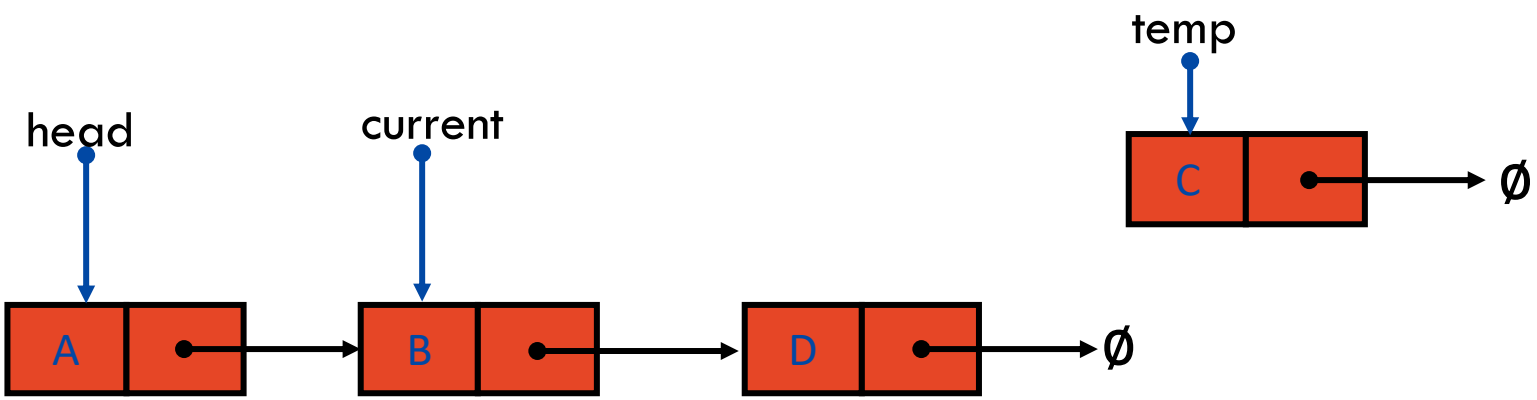

Doubly Linked Lists

Doubly Linked List

- A concrete data structure
- A sequence of Nodes, each with reference to prev and to next
- List captured by reference (head) to the first Node

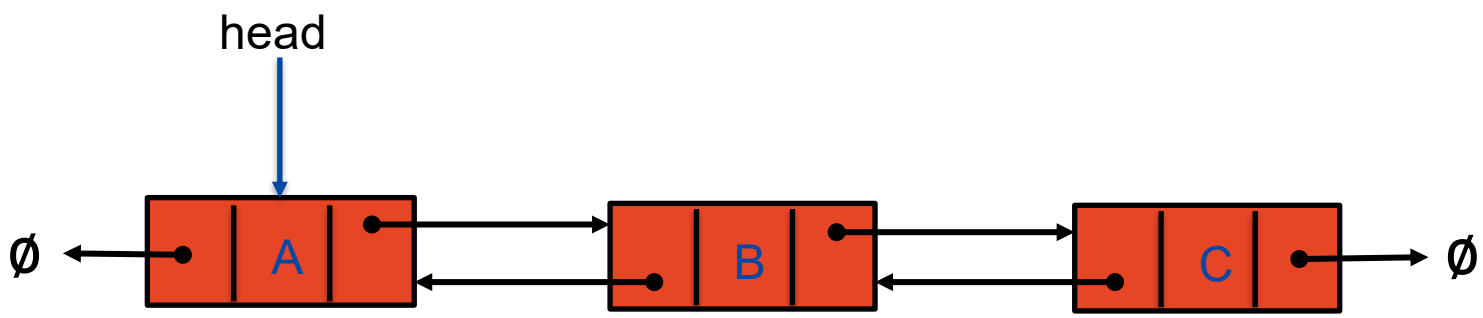

Doubly Linked List Node

- Doubly linked list is represented using nodes that have three fields:
  - Data
  - A pointer to the next node (next)
  - A pointer to the previous node (prev)

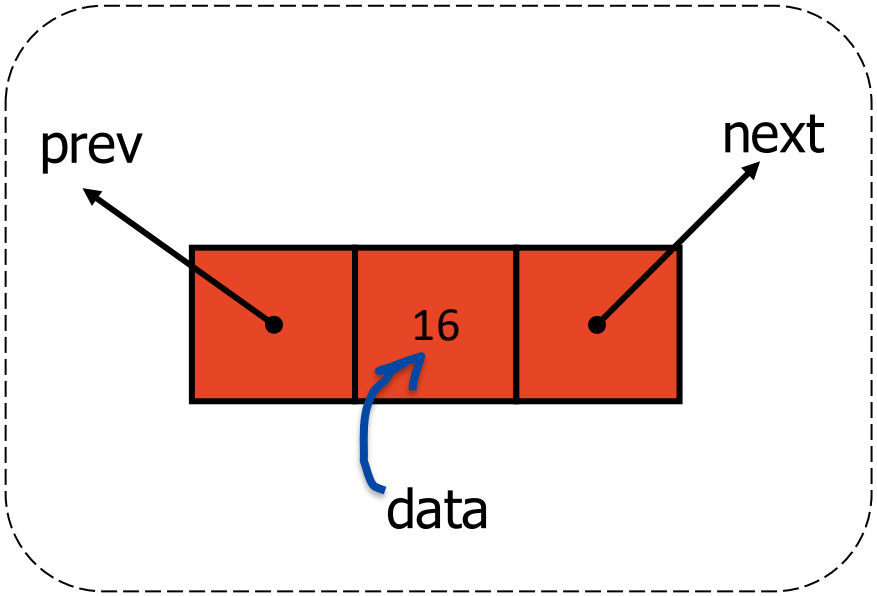

Operations on Doubly Linked List

- Insertion
  - Insert at the beginning
  - Insert at the end
  - Insert at a specific position
- Deletion
  - Delete from the beginning
  - Delete from the end
  - Delete a specific node
- Traversal

Traversal

Doubly Linked List

THE UNIVERSITY OF SYDNEY

Traversal (Step 01)

1. Store the current head node in a temporary variable

   current = head

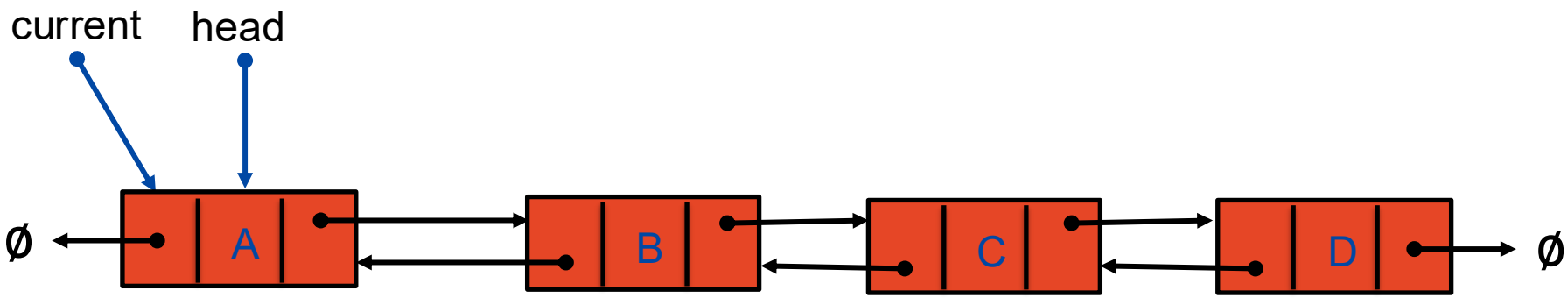

Traversal (Step 02)

2. Traverse the list until the last node is reached

```
current = head
while (current != None) {
    print(current.data)
    current = current.next
}
```

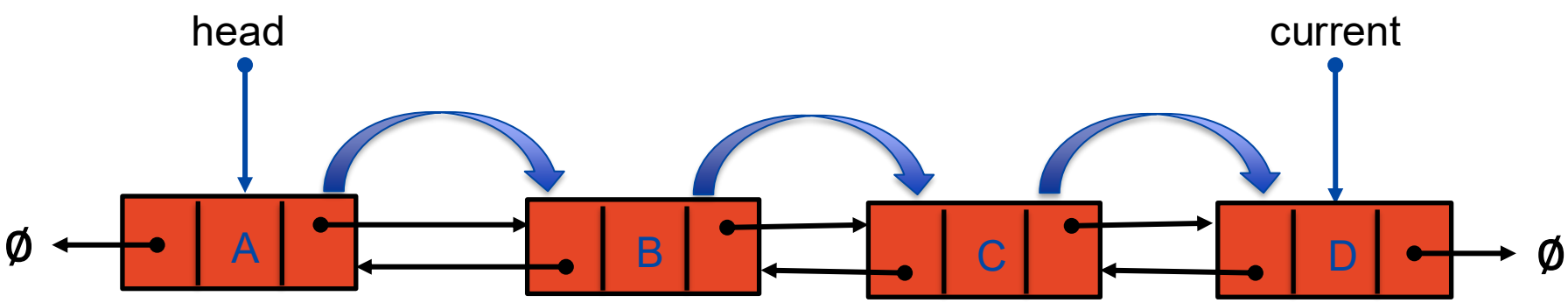

Insertion

Doubly Linked List

THE UNIVERSITY OF SYDNEY

Insert at the Beginning (Step 01)

1. Create a new node with data x

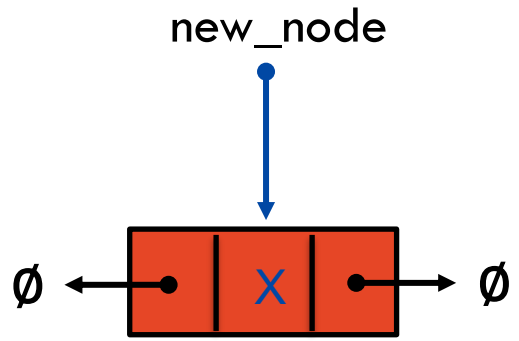

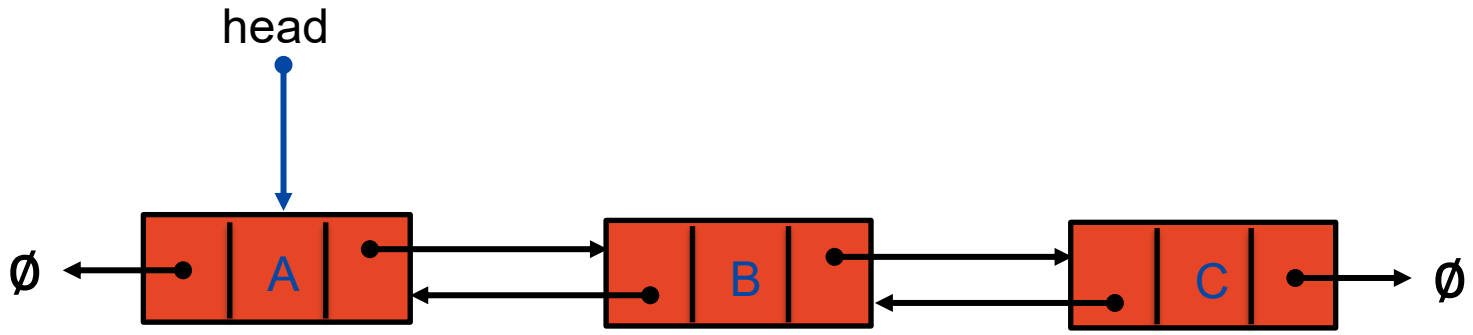

Insert at the Beginning (Step 02)

2. Set the next pointer of new node to the current head

new_node.next = head

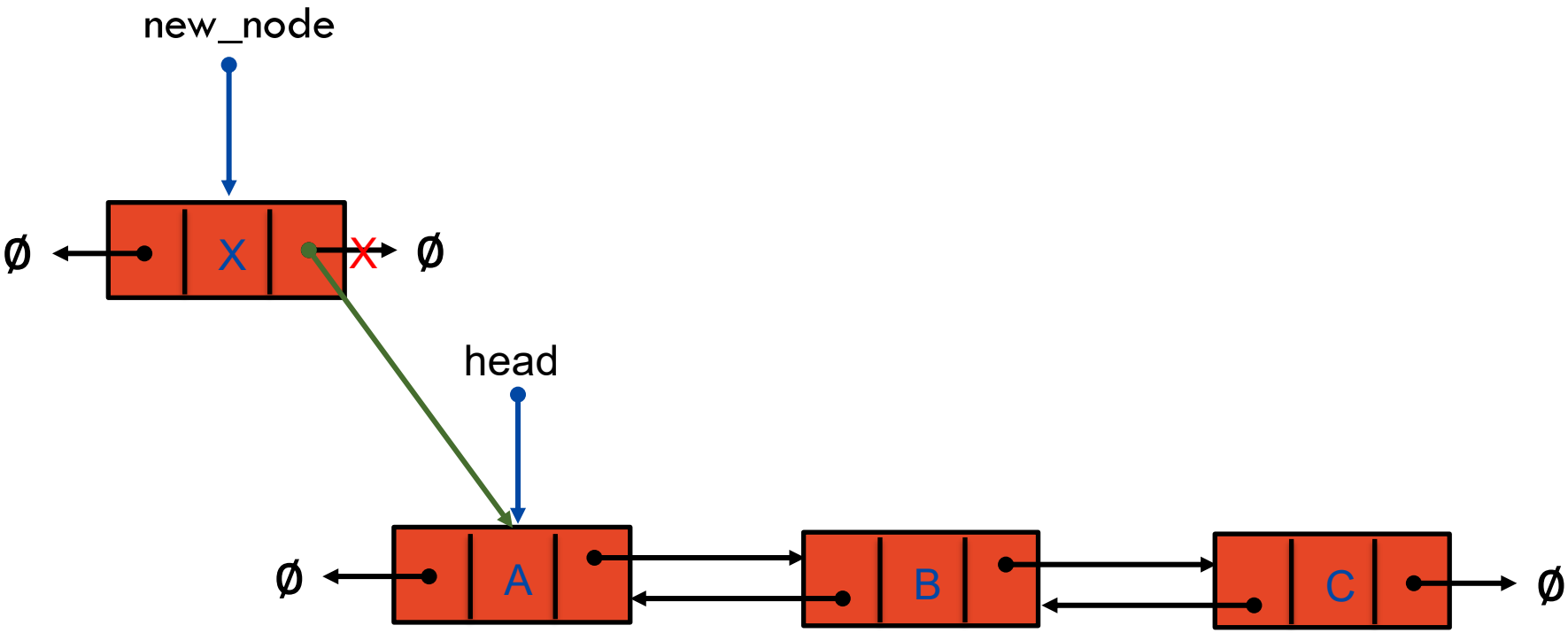

Insert at the Beginning (Step 03)

3. Update the previous pointer of the head to the new node

head.prev = new_node

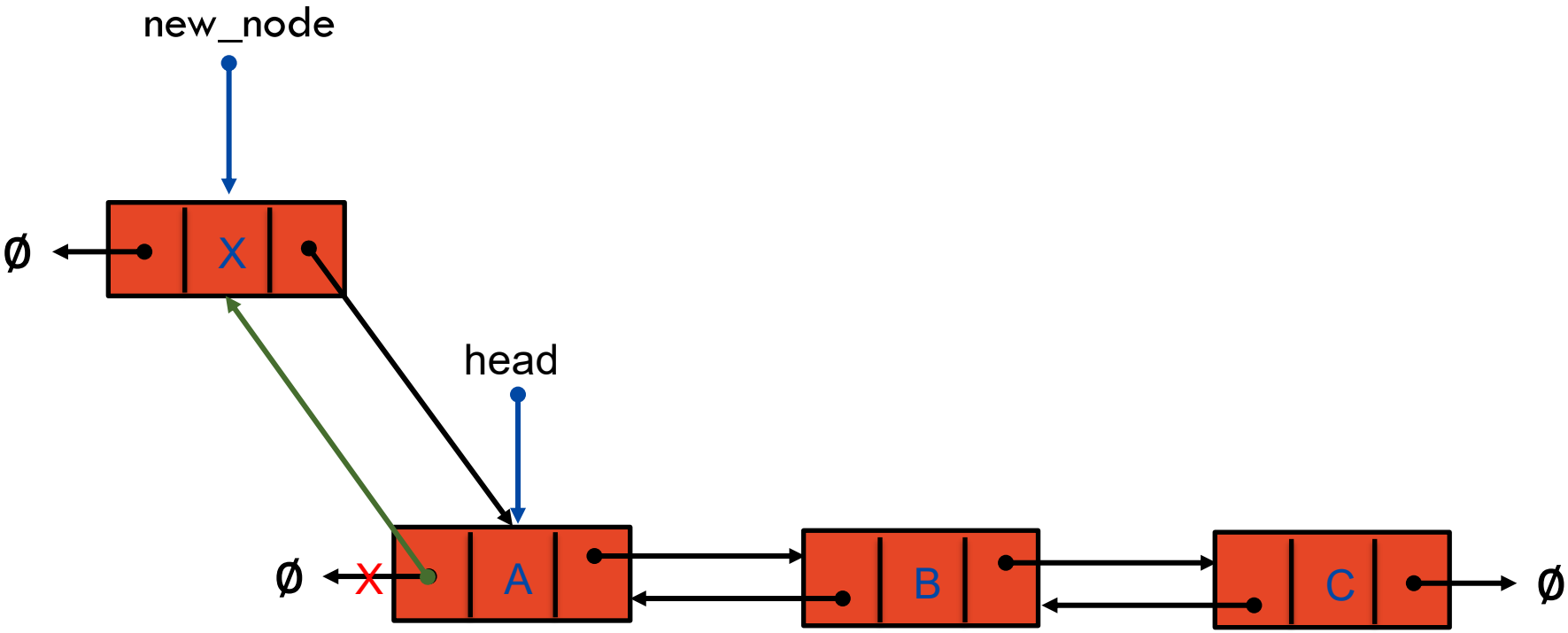

Insert at the Beginning (Step 04)

4. Move the head to point to the new node

   head = new_node

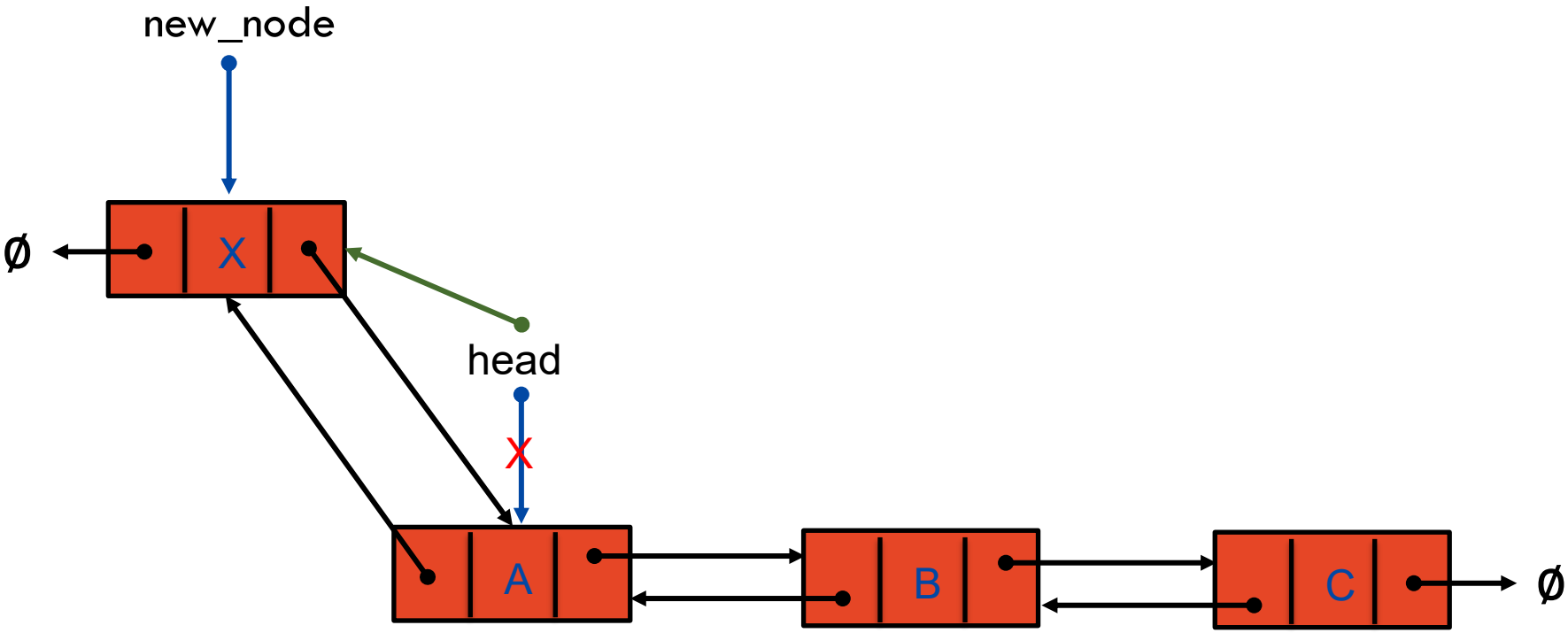

Insert at the Beginning (Result)

1. Create a new node with data x
2. Set the next pointer of new node to the current head
3. Update the previous pointer of the head to the new node
4. Move the head to point to the new node

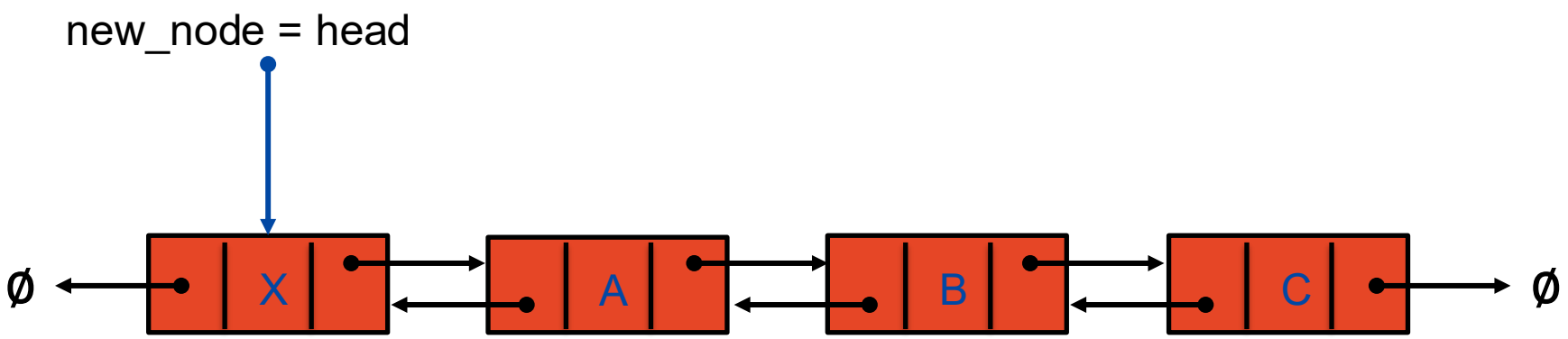

Insert at the End (Step 01)

1. Create a new node with data x

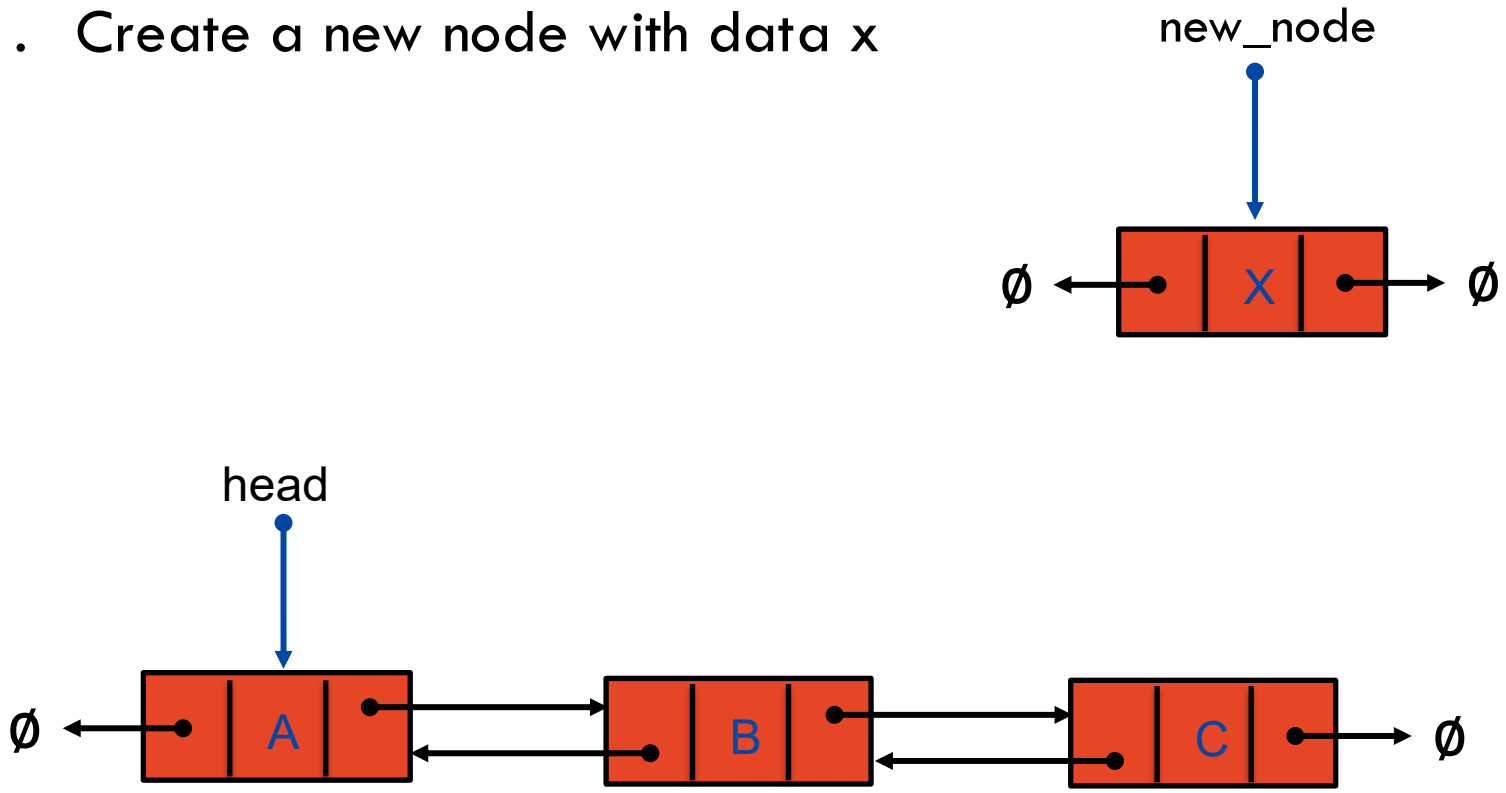

Insert at the End (Step 02)

2. Traverse the list until the last node is reached

```
current = head
while (current.next != None) {
    current = current.next
}
```

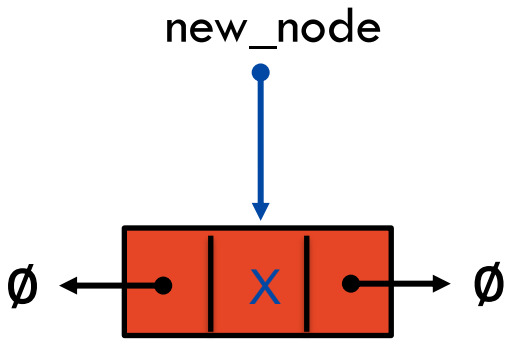

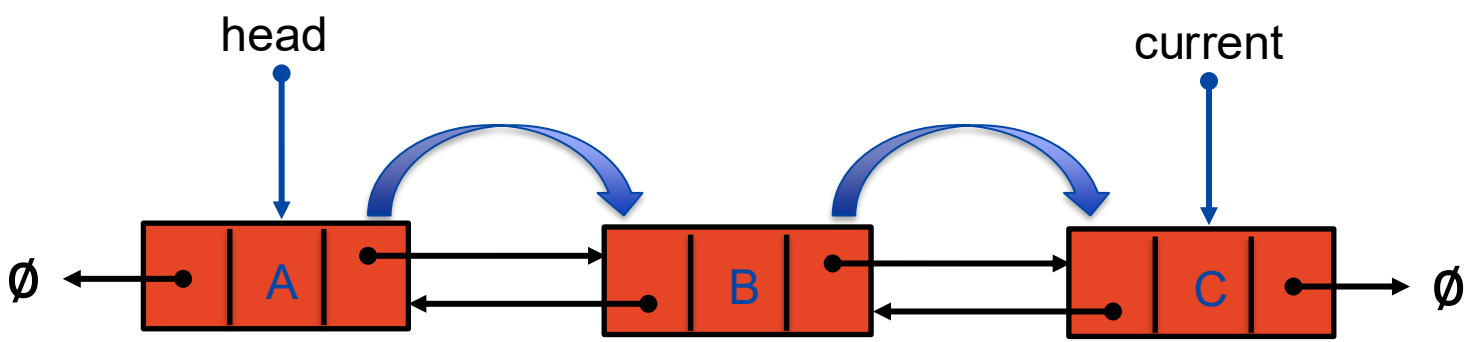

Insert at the End (Step 03)

3. Set the next pointer of last node to point to the new node

current.next = new_node

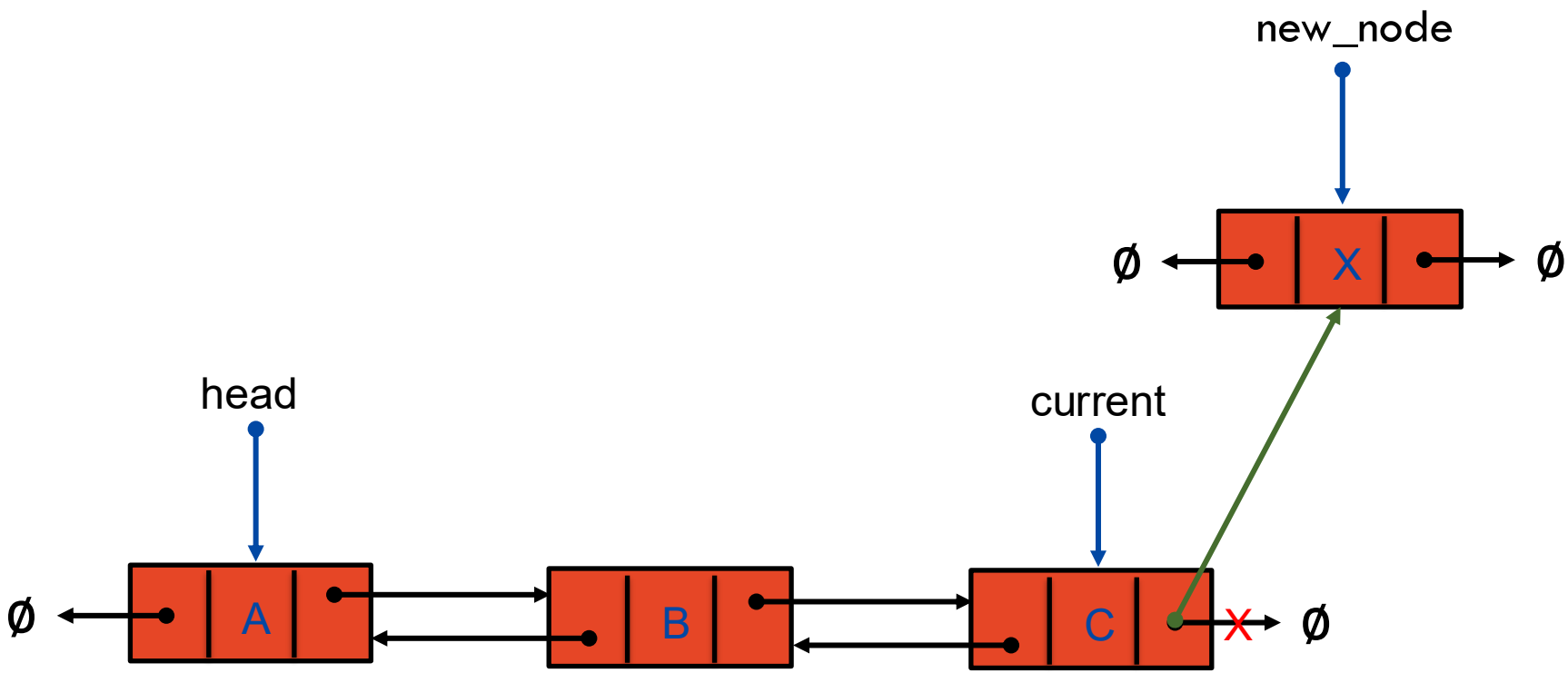

Insert at the End (Step 04)

4. Set the previous pointer of the new node to point to the last node

new_node.prev = current

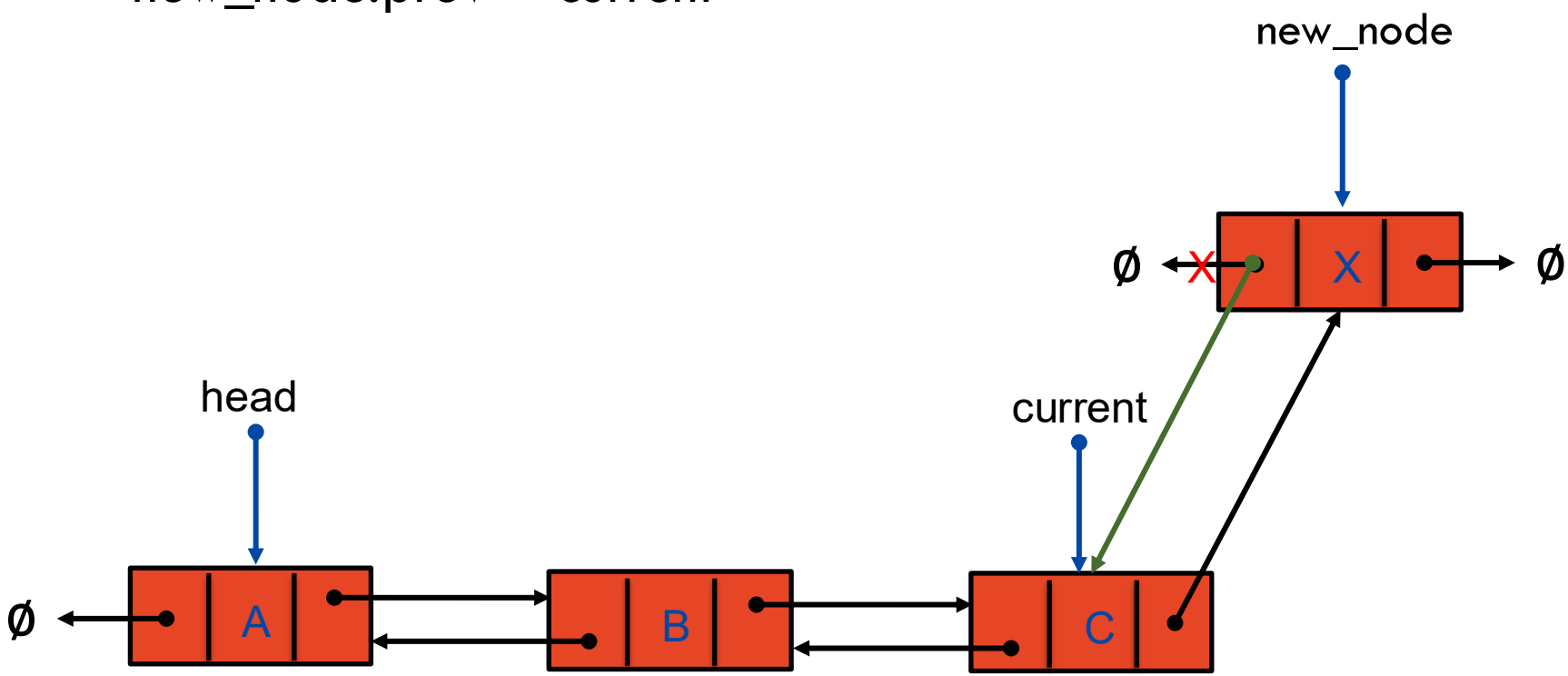

Insert at the End (Result)

1. Create a new node with data x
2. Traverse the list until the last node is reached
3. Set the next pointer of last node to point to the new node
4. Set the previous pointer of the new node to point to the last node

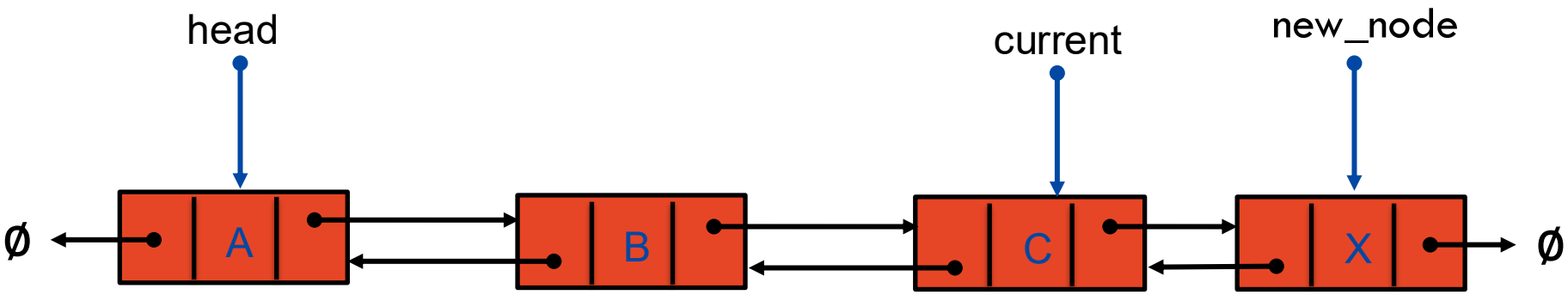

Insert at a Specific Position (Step 01)

1. Create a new node with data x

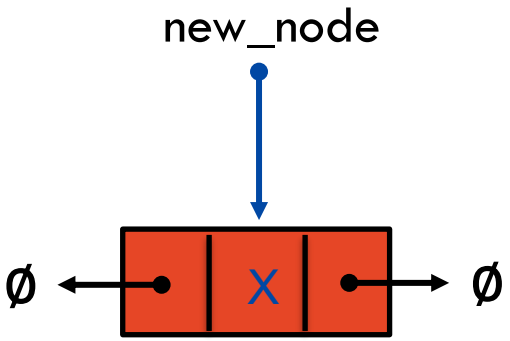

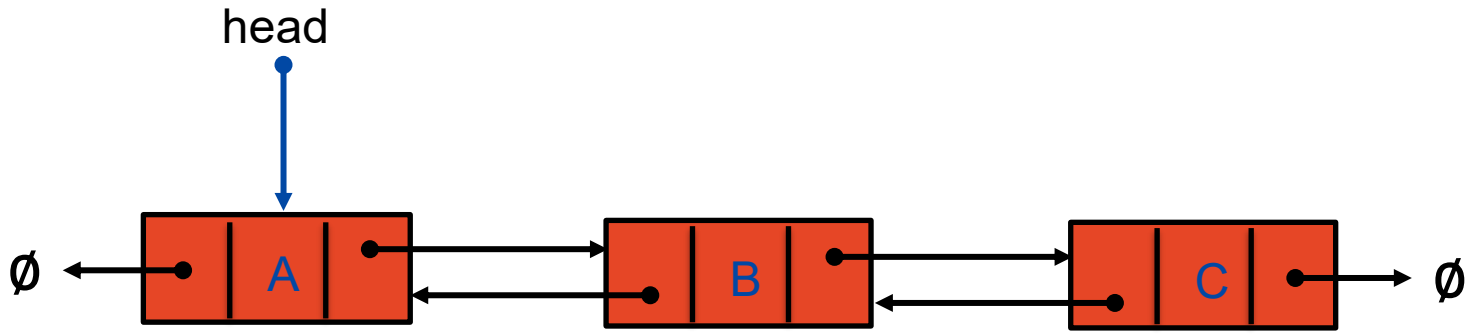

Insert at a Specific Position (Step 02)

2. Traverse the list to the desired position (i)

```
current = head
int count = 0
while (count < i-1 AND current != None) {
    current = current.next
     count++
}
```

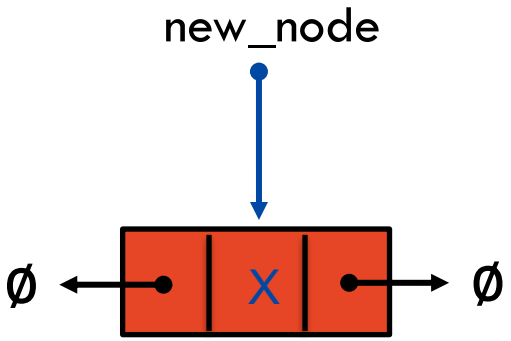

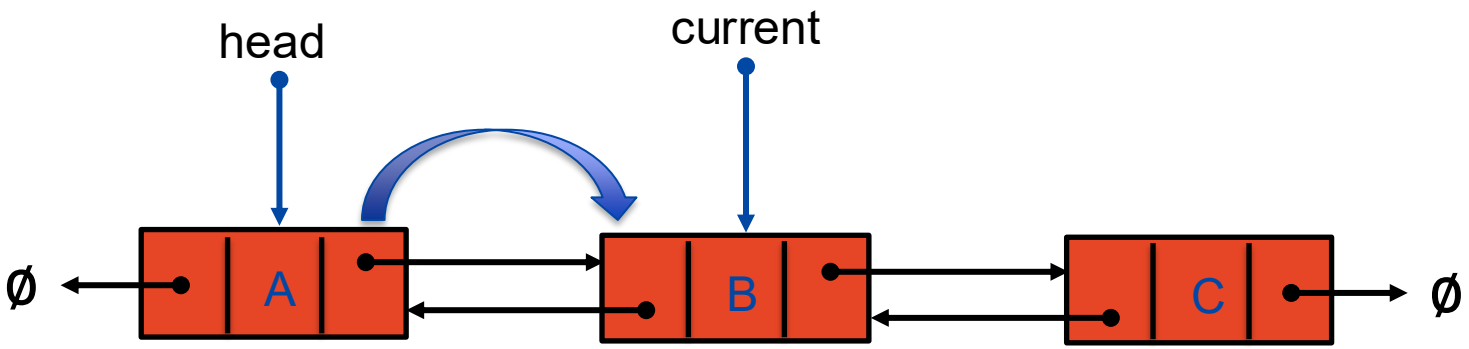

Insert at a Specific Position (Step 03)

3. Link the new node to the current last node

new_node.next = current.next

current.next.prev = new_node

current.next = new_node

new_node.prev = current

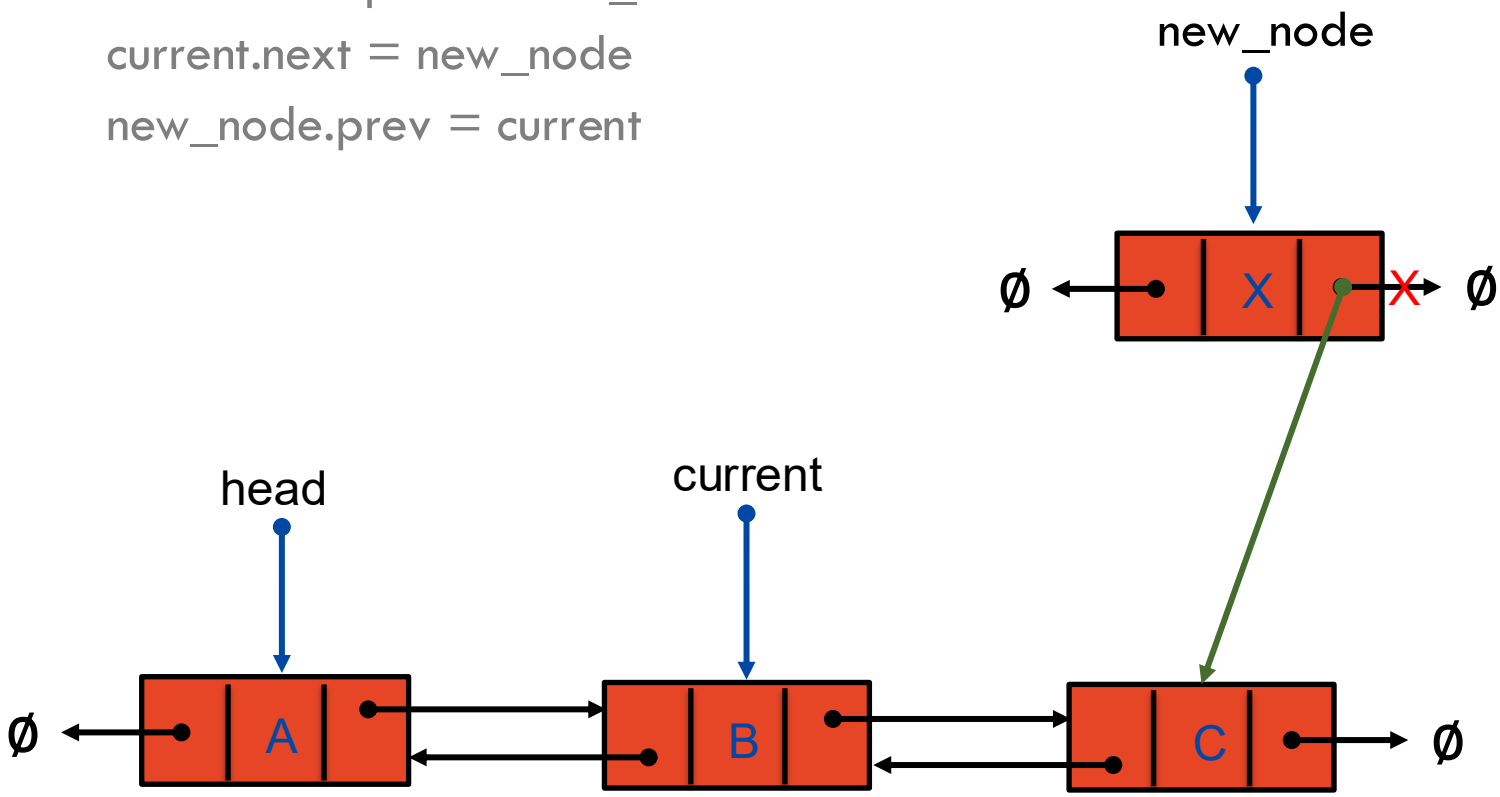

Insert at a Specific Position (Step 03)

3. Link the new node to the current last node

new_node.next = current.next

current.next.prev = new_node

current.next = new_node

new_node.prev = current

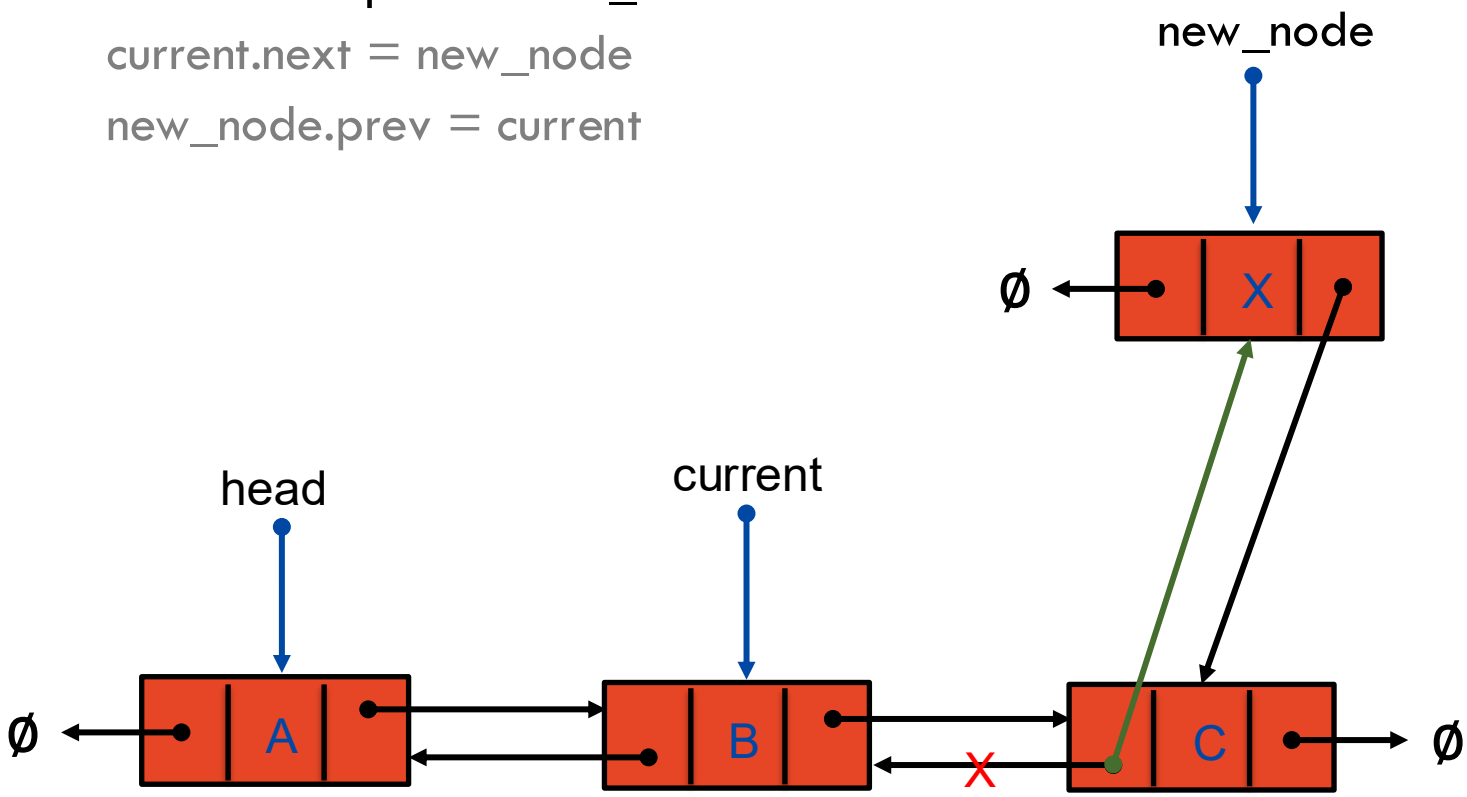

Insert at a Specific Position (Step 03)

3. Link the new node to the current last node

new_node.next = current.next

current.next.prev = new_node

current.next = new_node

new_node.prev = current

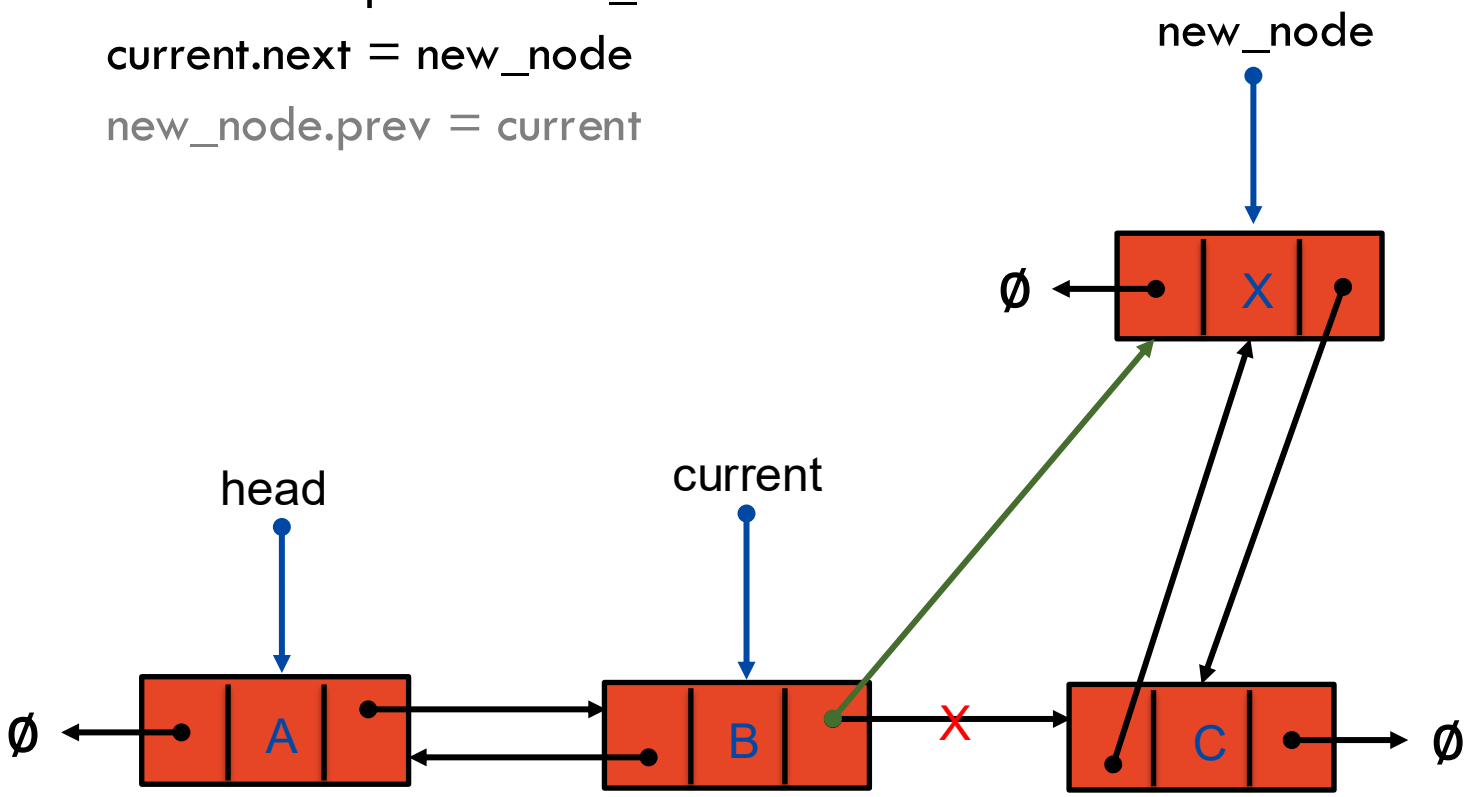

Insert at a Specific Position (Step 03)

3. Link the new node to the current last node

new_node.next = current.next

current.next.prev = new_node

current.next = new_node

new_node.prev = current

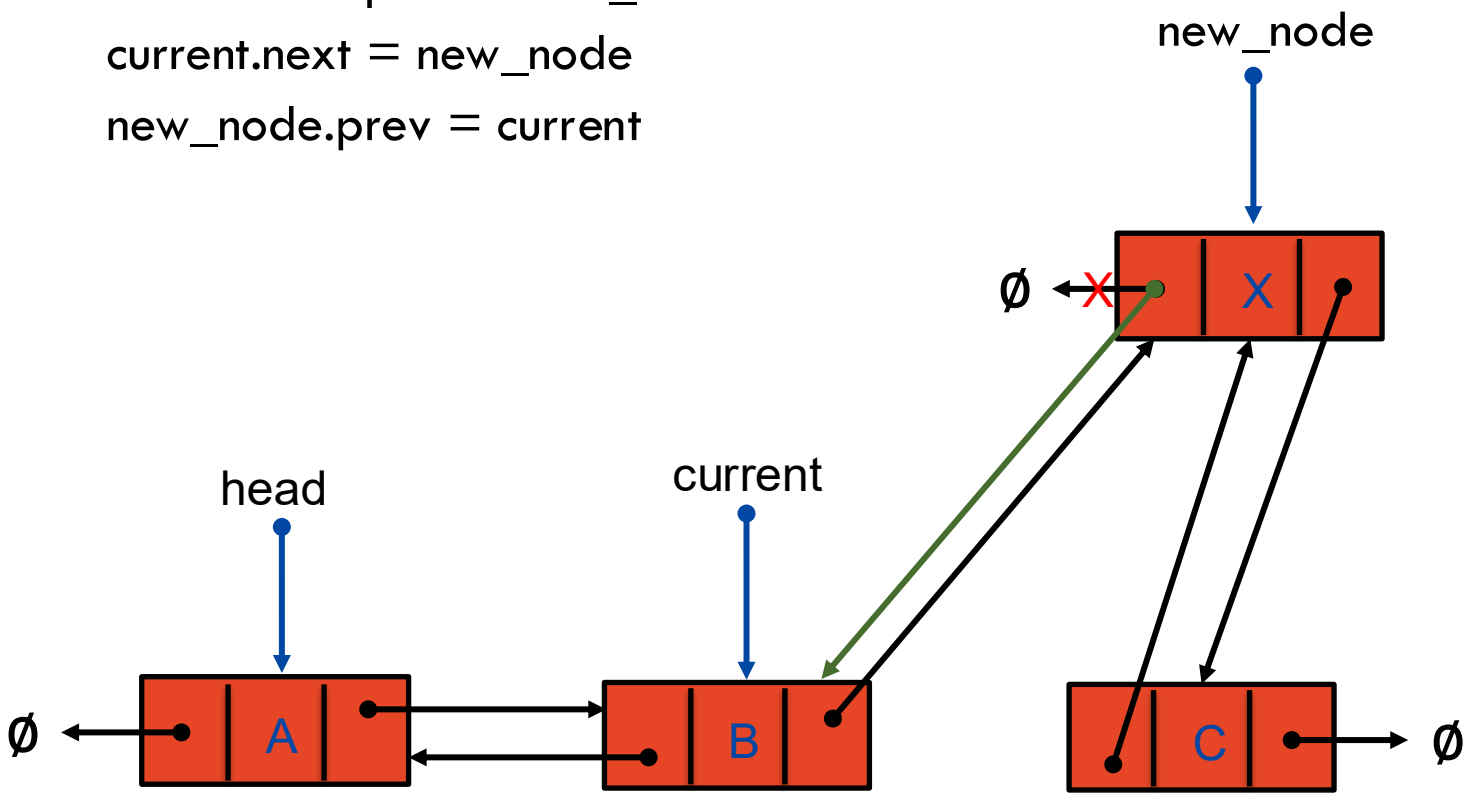

Insert at a Specific Position (Result)

1. Create a new node with data x
2. Traverse the list to the desired position (i)
3. Link the new node to the current last node

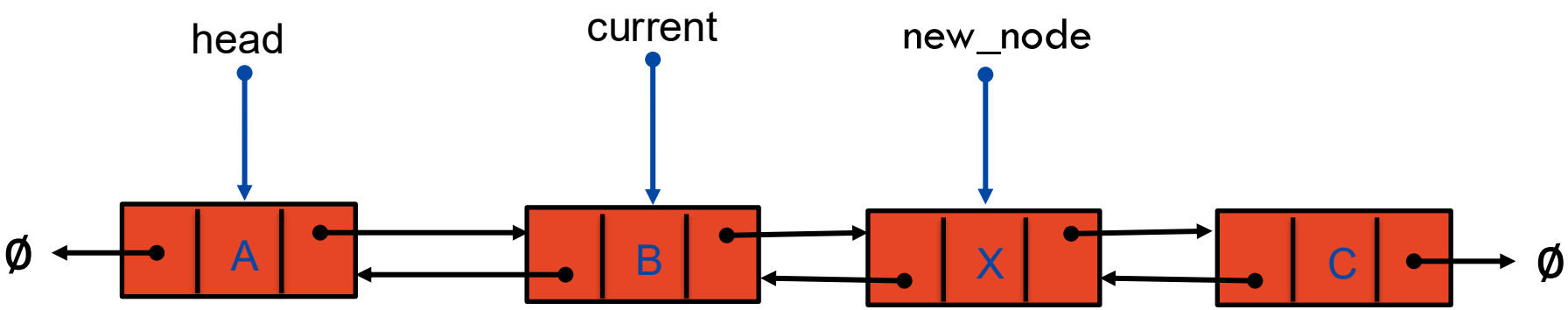

Deletion

Doubly Linked List

Deletion at the Beginning (Step 01)

1. Move the head pointer to the next node

   head = head.next

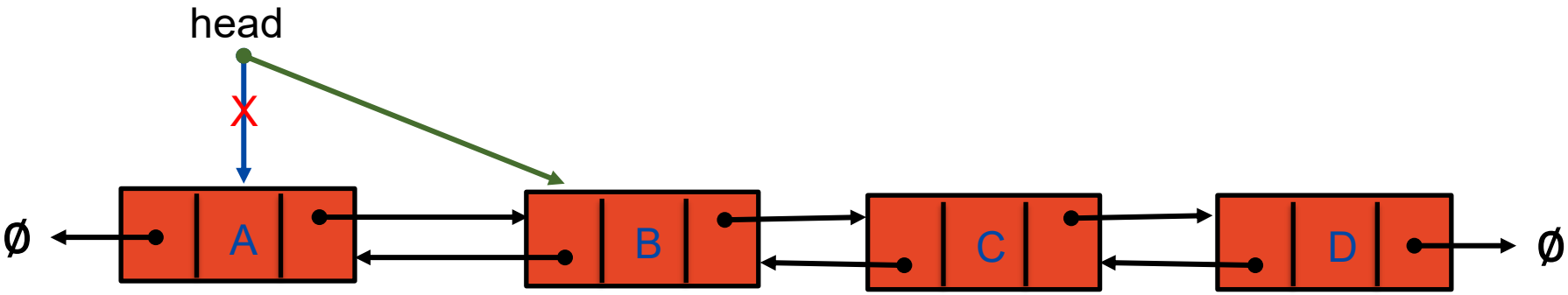

Deletion at the Beginning (Step 02)

2. Remove the links from and to the first node

head.prev.next = None

head.prev = None

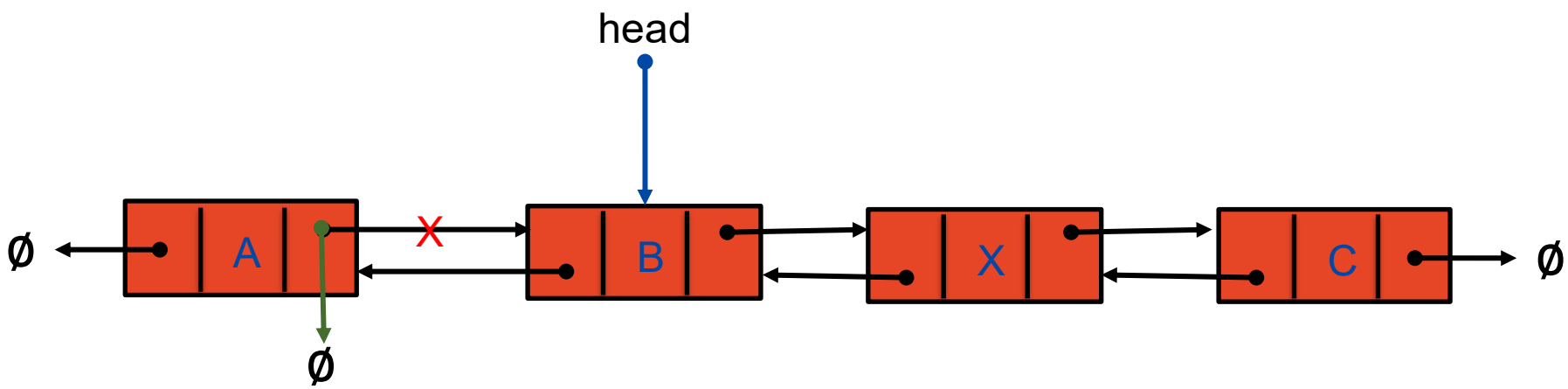

Deletion at the Beginning (Step 02)

3. Remove the links from and to the first node

head.prev.next = None

head.prev = None

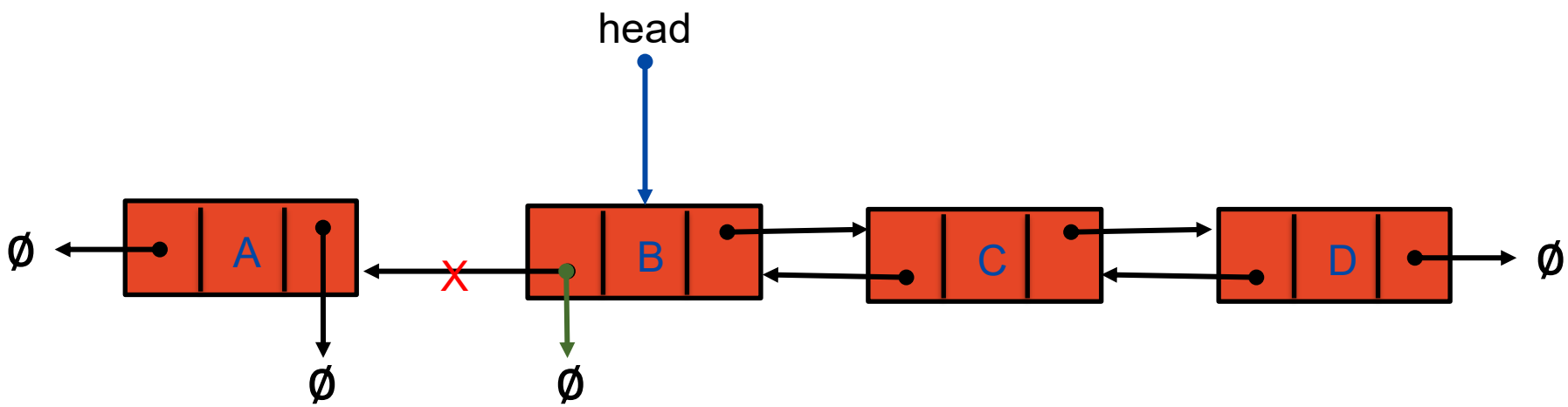

Deletion at the Beginning (Result)

1. Move the head pointer to the next node
2. Remove the links from and to the first node

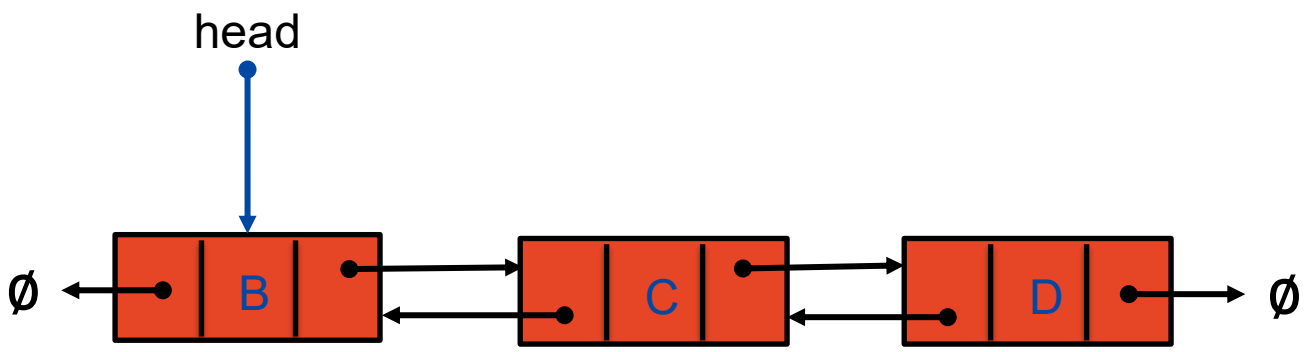

Deletion at the End (Step 01)

1. Traverse the list to find the last node

```
current = head
while (current.next != None){
    current = current.next
}
```

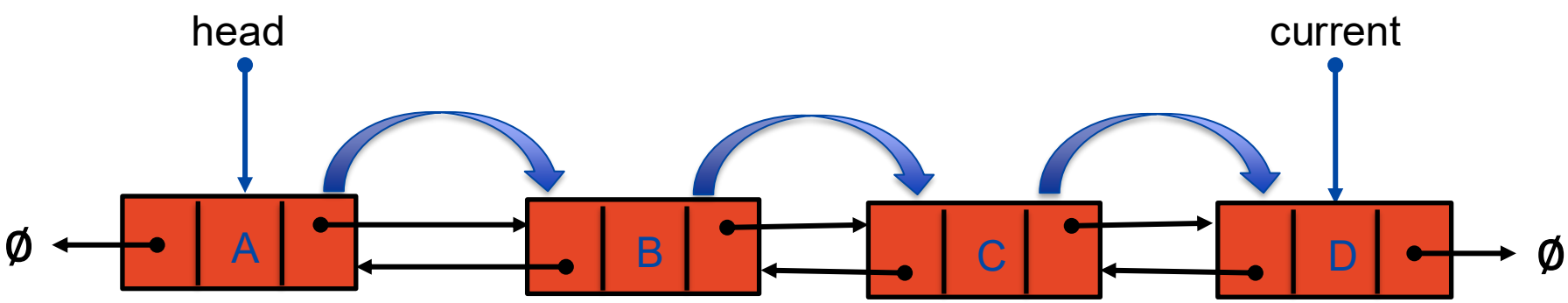

Deletion at the End (Step 02)

2. Remove the links from and to the current node

current.prev.next = None

current.prev = None

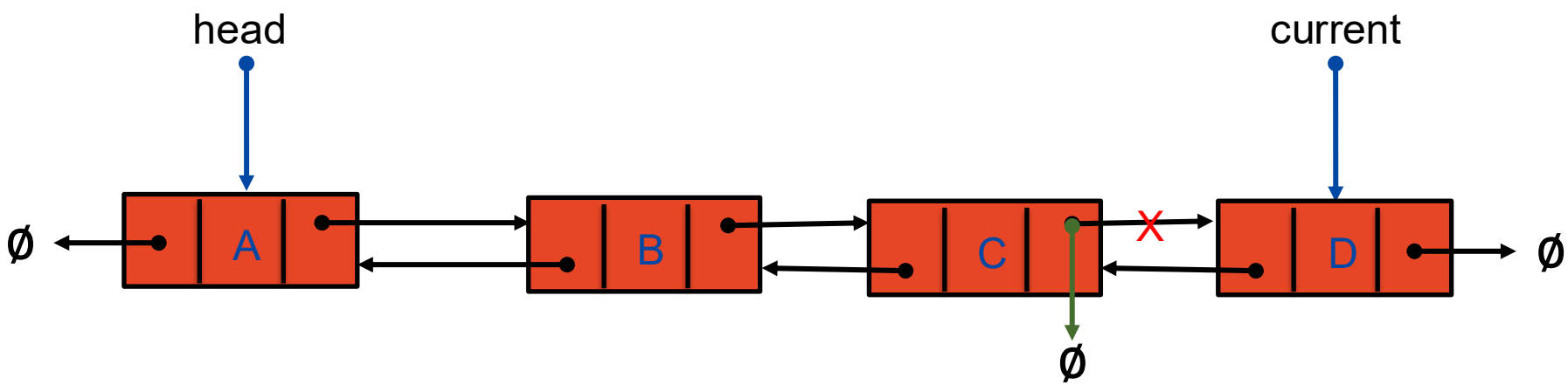

Deletion at the End (Step 02)

2. Remove the links from and to the current node

current.prev.next = None

current.prev = None

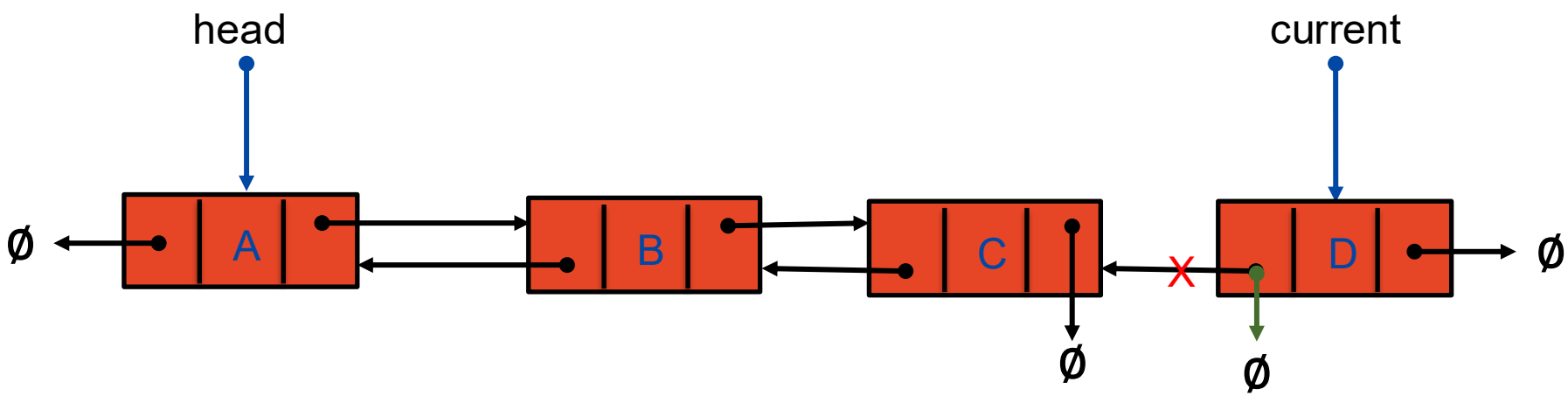

Deletion at the End (Result)

1. Traverse the list to find the last node
2. Remove the links from and to the current node

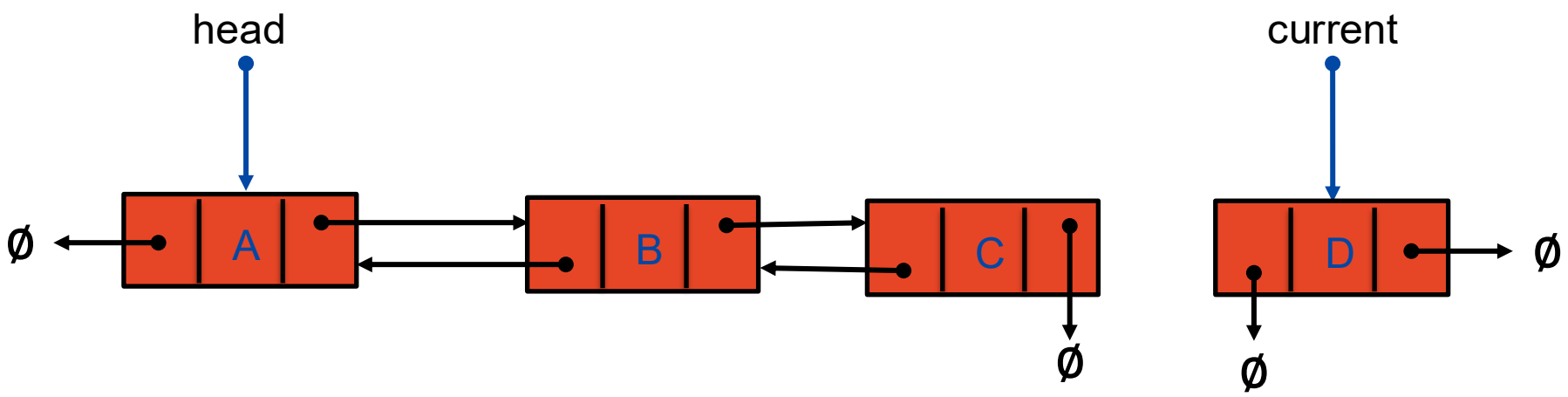

Deletion at Specific Position (Step 01)

1. Traverse to the node to be deleted

```
current = head
count = 0
while (count < index AND current != None){
    current = current.next
    count++
}
```

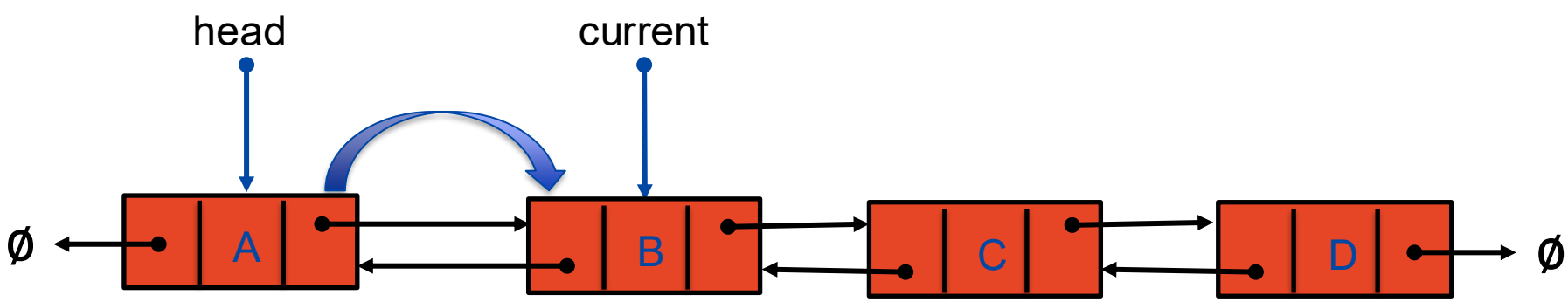

Deletion at Specific Position (Step 02)

2. Remove the links from and to the current node

current.prev.next = current.next

current.next.prev = current.prev

current.prev = None

current.next = None

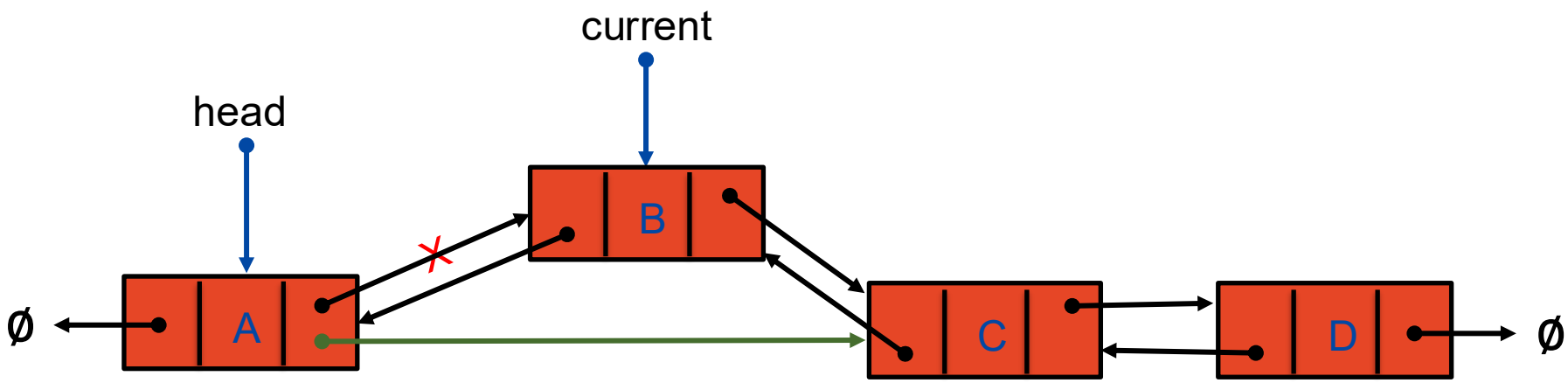

Deletion at Specific Position (Step 02)

2. Remove the links from and to the current node

current.prev.next = current.next

current.next.prev = current.prev

current.prev = None

current.next = None

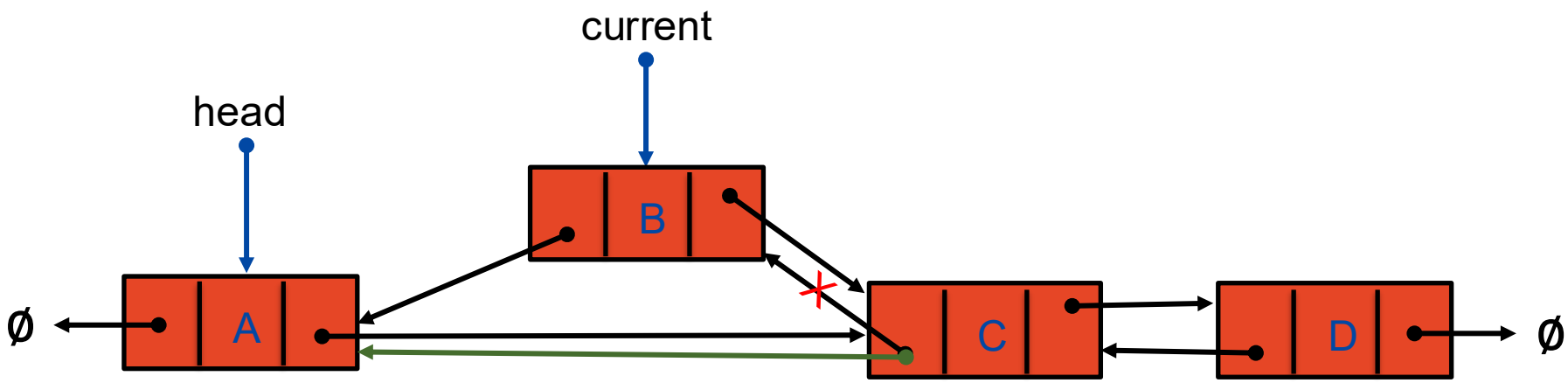

Deletion at Specific Position (Step 02)

2. Remove the links from and to the current node

current.prev.next = current.next

current.next.prev = current.prev

current.prev = None

current.next = None

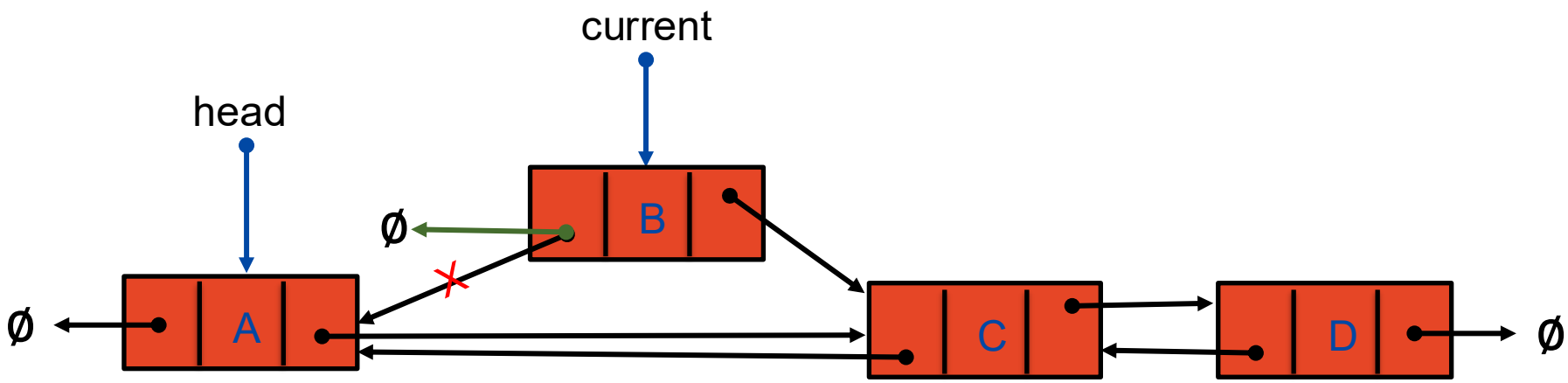

Deletion at Specific Position (Step 02)

2. Remove the links from and to the current node

current.prev.next = current.next

current.next.prev = current.prev

current.prev = None

current.next = None

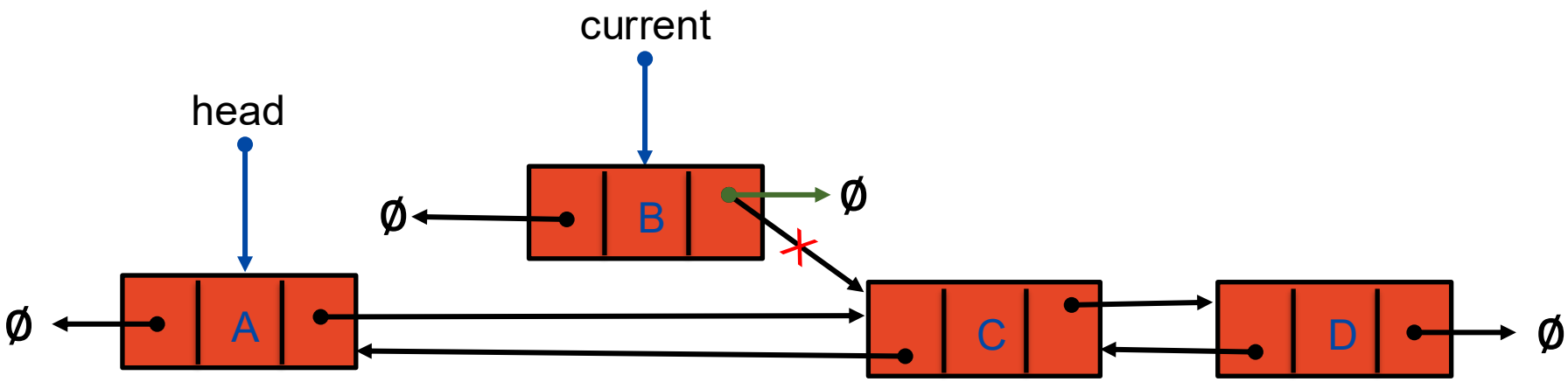

Deletion at Specific Position (Result)

1. Traverse to the node to be deleted
2. Remove the links from and to the current node

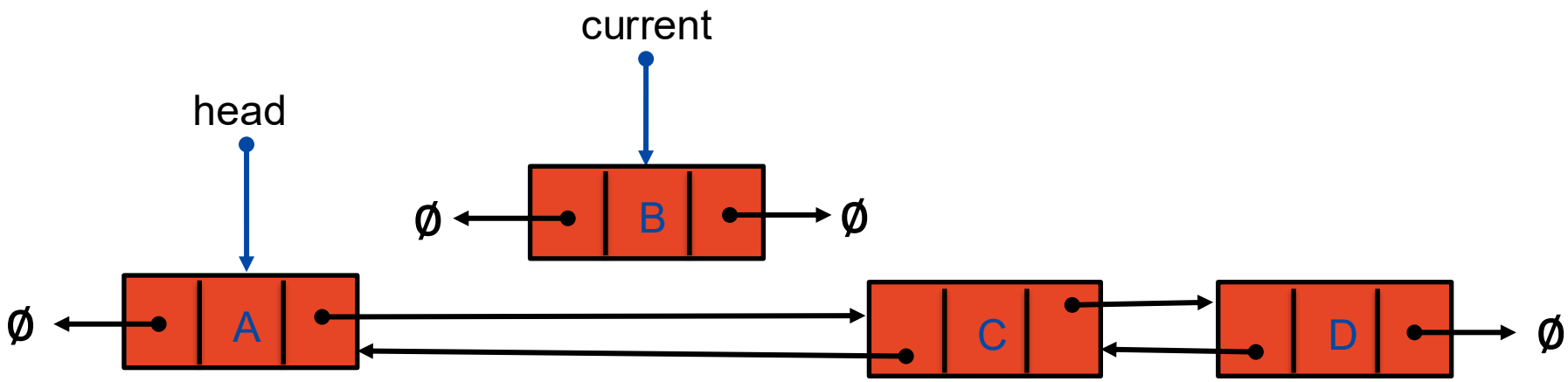

Circular Linked Lists *(Extra)*

THE UNIVERSITY OF SYDNEY

Circular Linked List

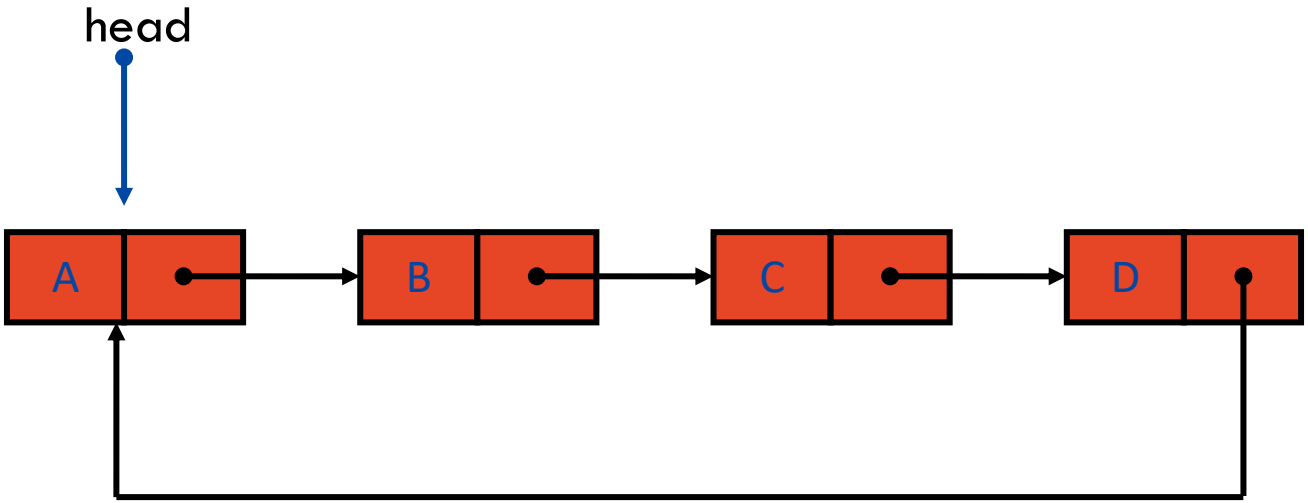

Alarm App on iPhone

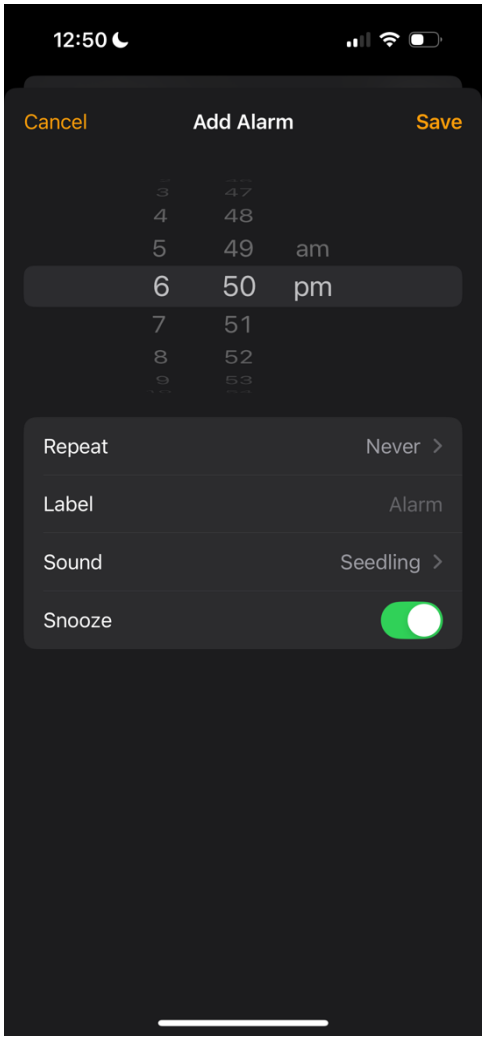

Alarm App on iPhone

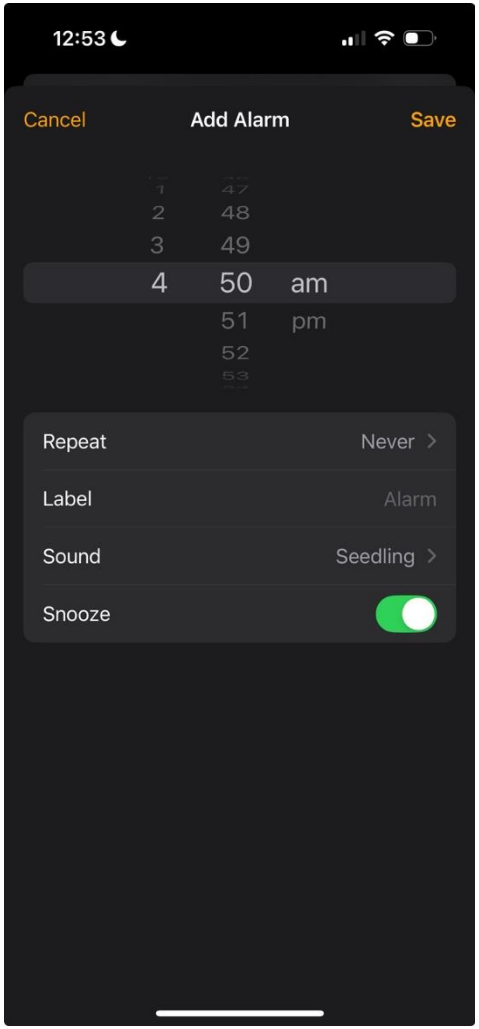

You are now better than the Apple!

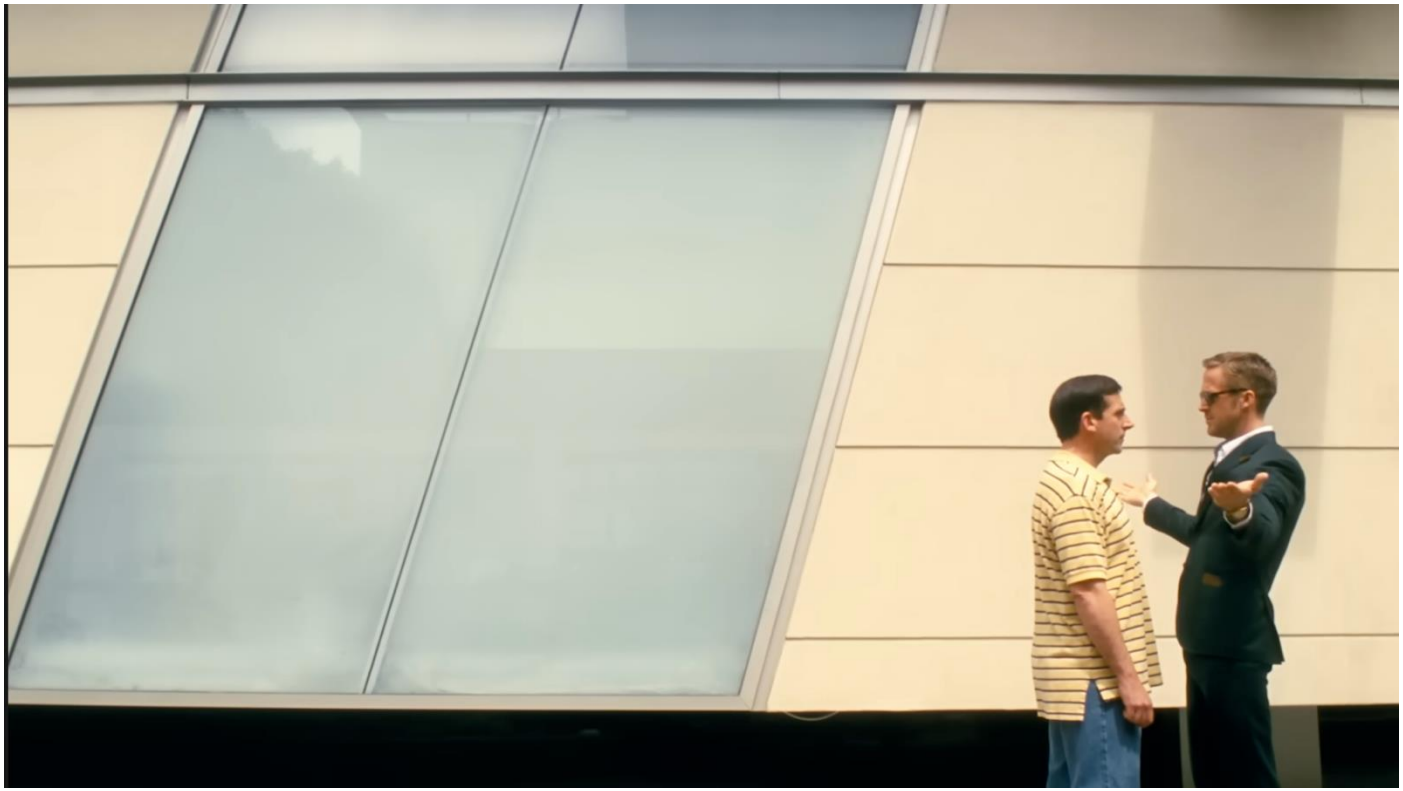

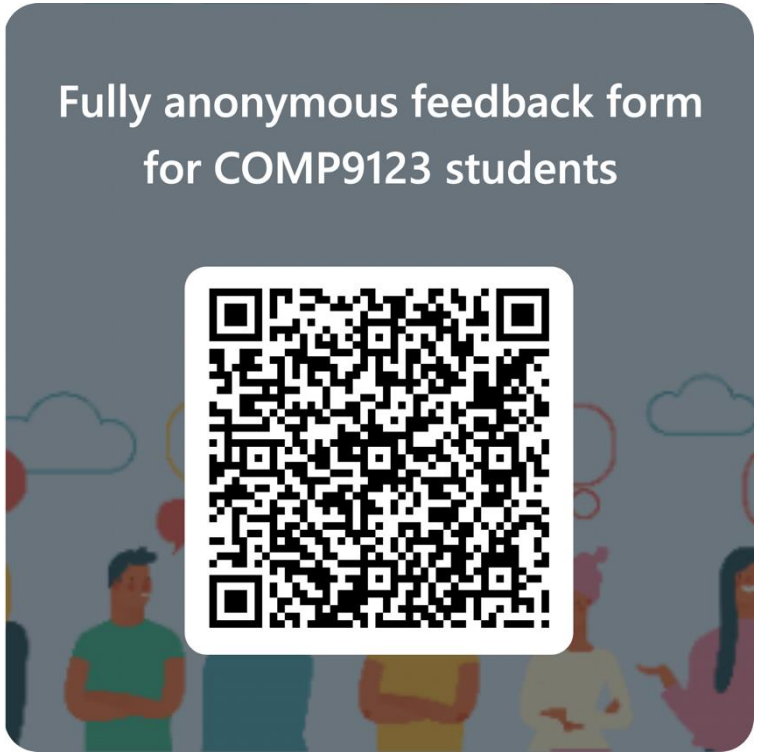

Fully anonymous feedback form for COMP9123 students – Fill out form

Updates: